OPERATOR'S MANUAL
SET-UP INSTRUCTIONS
&
PARTS LIST

18' SINGLE AUGER SEED-FILL
JD 1790/1795

MARKET FARM EQUIPMENT LIMITED, R.R.#1 DASHWOOD, ONTARIO, CANADA

TEL# 519-238-2301 FAX# 519-238-6044 E-MAIL: natashagreen13@hotmail.com

www.marketfarmequipment.com

"SERVING THE FARM INDUSTRY SINCE 1962"

WARRANTY PROCEDURE

MARKET FARM EQUIPMENT WARRANTS THEIR MANUFACTURED PRODUCTS TO BE FREE FROM DEFECTS IN MATERIAL AND WORKMANSHIP FOR A PERIOD OF ONE (1) YEAR AFTER THE DATE DELIVERED TO THE FIRST USER AND IS SUBJECT TO THE FOLLOWING CONDITIONS:

1. Damage caused by improper use, neglegence, or operation beyond rated capacity, improper set-up, adjustment, or any unauthorized modifications made by the dealer or customer, shall void this warranty.

2. Notification of damage or warranty claims shall be submitted to Market Farm Equipment (M.F.E.) within 7 days of date of failure.

3. All defective parts must be made available by the dealer for inspection by M.F.E. if required, and returned at the dealers' expense.

4. All warranty claims must be approved by M.F.E.

5. The labour and freight required to replace defective parts is not reimbursable.

6. Exchange, credit or warranty status will be based on the results of the inspection of damaged items by the manufacturer.

7. Credit will be issued if and when the warranty claim is approved and MUST NOT be deducted from the account by the dealer.

8. Products not manufactured by Market Farm Equipment are subject to their own manufacturer's warranty conditions.

NOTE: WARRANTY CONSIDERATION IS ONLY VALID WHEN WARRANTY REGISTRATION FORM HAS BEEN RECEIVED BY MARKET FARM EQUIPMENT

MARKET FARM EQUIPMENT LIMITED
Express Warranty

M.F.E. Ltd. warrants against defects in construction or materials for a period of ONE year. We reserve the right to inspect and decide whether material or construction was faulty or whether abuse or accident voids our guarantee.

This warranty does not cover a component which fails, malfunctions or is damaged as a result of (i) improper modification or repair, (ii) accident, abuse or improper use, (including loading beyond the specified maximum weights) (iii) improper or insufficient maintenance, or (iv) normal wear and tear.

THIS WARRANTY IS EXPRESSLY IN LIEU OF ALL OTHER WARRANTIES OR CONDITIONS, EXPRESS, IMPLIED OR STATUTORY, INCLUDING ANY IMPLIED WARRANTY OF MERCHANTABILITY OR FITNESS FOR PARTICULAR PURPOSE.

In no event shall M.F.E. Ltd. be liable for special, direct, incidental or consequential damages of any kind, including but not limited to labor charges.

The exclusive remedy under this warranty shall be repair or replacement of the defective component at M.F.E. Ltd. option. This is the entire agreement between M.F.E. Ltd. and the Owner about warranty and no M.F.E. Ltd. employee or dealer is authorized to make any additional warranty on behalf of M.F.E. Ltd.

(fill in the following for future reference)

Serial number: _____

Date of purchase: _____

Purchased from: _____

WARRANTY REGISTRATION

MARKET FARM EQUIPMENT LIMITED
71796A BLUEWATER HIGHWAY, ONTARIO, CANADA, N0M 1N0
Fax: 519-238-6044 E-mail: mfeltd@execulink.com

Purchaser's warranty protection on this equipment is valid only when this registration form is completed by the purchaser and returned to Market Farm Equipment Limited.

Date of purchase: _____

Type of equipment: _____

Model number: _____ Serial number: _____

PURCHASER'S SIGNATURE INDICATES:

- Acceptance of equipment, fully assembled ( ) unassembled ( )
- Receipt of operator's manual
- Clear understanding of warranty
- Receipt of instructions on special safety equipment available
- Receipt of instructions on safe and proper operating procedures

PURCHASER:

Name: _____

Signature: _____

Mailing Address: _____

Prov./State: _____ Postal/Zip Code: _____

Telephone number: _____

Purchased from: _____

THIS WARRANTY MUST BE VALIDATED BY THE MANUFACTURER

It is valid only when a copy of the registration has been received by the manufacturer at address shown.

SAFETY INFORMATION

- Before using auger READ and UNDERSTAND SAFETY INSTRUCTIONS.
- After hydraulic lines are connected, run auger empty to ensure the flighting is rotating in the proper direction. (if ran backwards, damage may occur)
- Auger should be empty when moving or transporting.
- Hydraulic oil leaking under pressure can cause injury. Make sure all hydraulic connections are tight. Before disconnecting hydraulic lines, relieve pressure.
- Do not adjust, clean or service auger while it is running.
- Keep all safety shields in place. Replace any safety decals that become lost or damaged.
- Do not operate the auger in a manner that it was not intended for.
- When transporting, always keep auger in its lowest position.

HYDRAULIC SYSTEM OPERATING RESTRICTIONS

MAXIMUM FLOW – 15 G.P.M. MAXIMUM PRESSURE – 1750 P.S.I.

MAXIMUM FLOW AND MAXIMUM PRESSURE conditions MUST NOT occur simultaneously. Damage will occur and warranty will be void. Use only ½" hydraulic hose when plumbing. Smaller hose will create heat that will burn out the hydraulic motor and warranty will be void.

Do not tee into hydraulic lift cylinders on planters or drills.

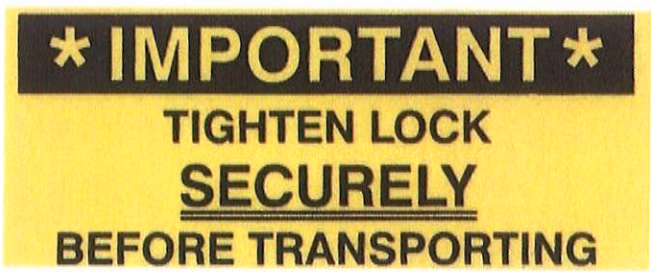

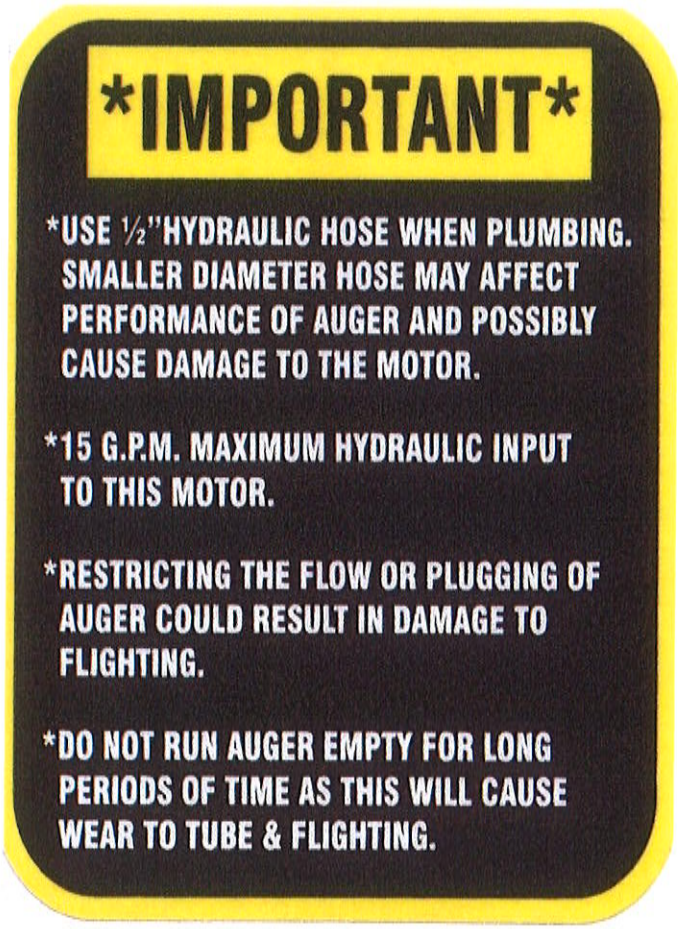

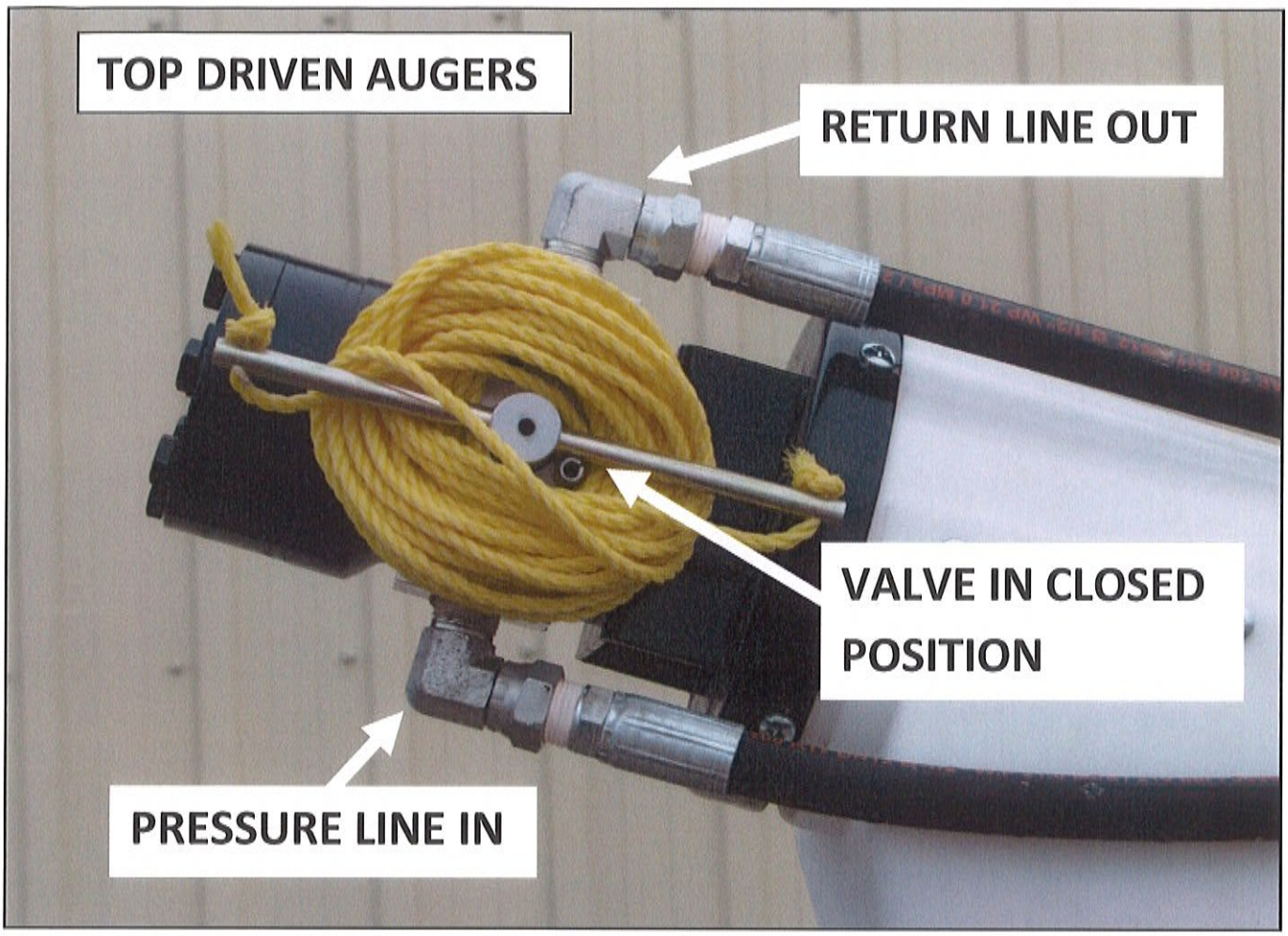
TOP DRIVEN AUGERS
RETURN LINE OUT
VALVE IN CLOSED POSITION
PRESSURE LINE IN

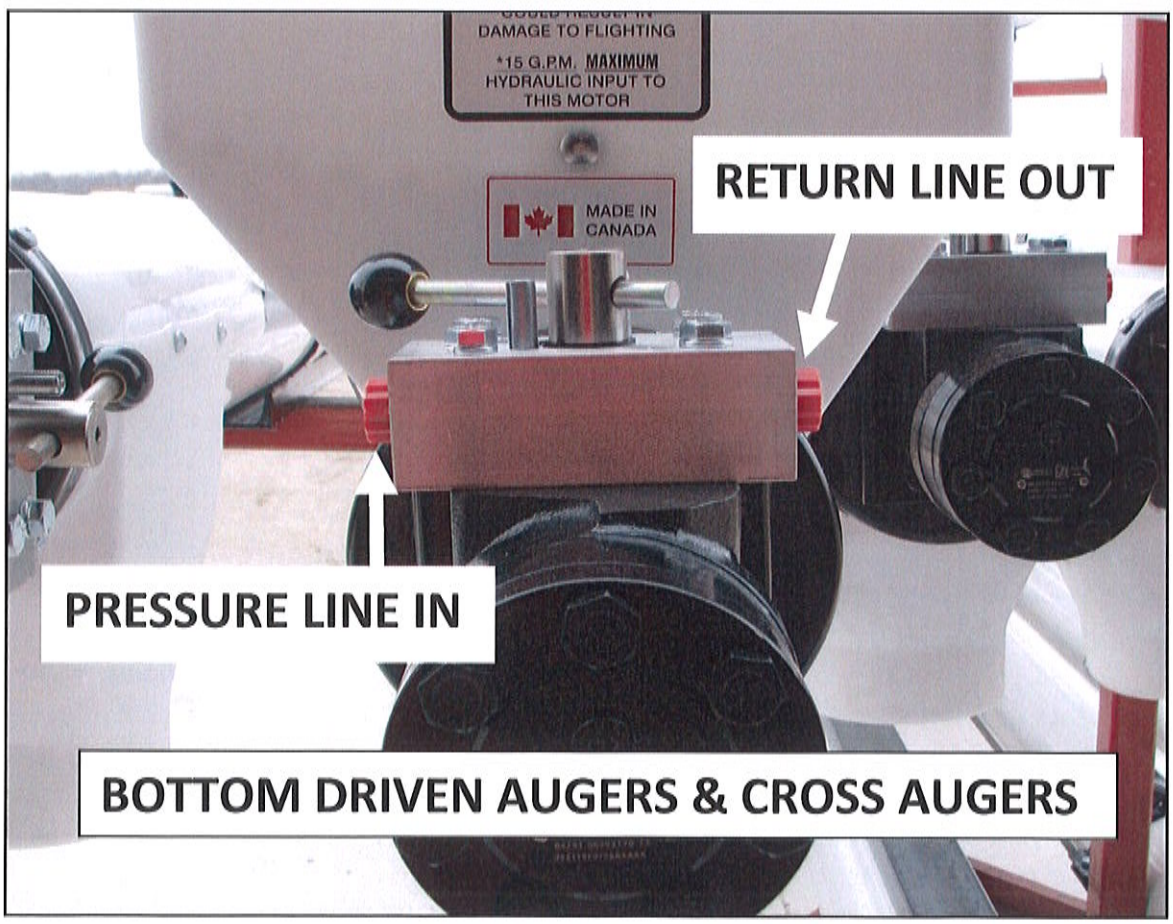
DAMAGE TO FLIGHTING
*15 G.P.M. MAXIMUM HYDRAULIC INPUT TO THIS MOTOR
MADE IN CANADA
RETURN LINE OUT
PRESSURE LINE IN
BOTTOM DRIVEN AUGERS & CROSS AUGERS

SINGLE AUGER SEED FILL MOUNTING INSTRUCTIONS FOR John Deere 1790

Remove left side of hand rail. Lower front guard rail as low as possible. This can be re-adjusted after auger is in transport position.

Remove SMV sign complete with mounting bracket. This can be attached to the main post using the 2 welded on bolts.

1. **Mount main post as shown in diagram, 9" up on tool bar support.**
2. **Slide swing arm onto post making sure that the plastic sleeves stay inside to allow easy swinging.**
3. **Slide UHMW plastic washer onto post, then attach post collar to top of post.**
4. **Bolt transport bracket as shown in diagram, 14" down on 4" x 4" main post.**
5. **Slide wedge lock receiver into end of transpot bracket (DO NOT tighten 3/4" set bolt until auger is in transport position).**
6. **Slide swivel post into swing arm. Bolt lock collar using 3/4" bolt and lock washer to secure swivel post.**
7. **Swing auger into transport position and tighten 3/4" set bolt on wedge lock receiver.**
8. **Attach 4' x 6" flexible downspout using hose clamp.**
9. **Attach vertical hopper to bottom of auger.**
10. **When plumbing auger make sure to use 1/2" hydraulic hose.**

NOTE: We suggest welding a stop on the planter leg at the bottom of main post to eliminate post movement due to wear.

* IMPORTANT *

TIGHTEN LOCK
SECURELY
BEFORE TRANSPORTING

DAMAGE CAUSED TO AUGER OR HARDWARE DUE TO UNSECURED LOCKS, WILL NOT BE COVERED BY WARRANTY.

18' SINGLE AUGER SEED FILL JD 1790/1795 DRILL PARTS LIST

REF #	PRO CD	DESCRPTION
1	1485	9 ½" UHMW SLEEVE
2	1188	SWING ARM
3	1344	POST CAP
5	1175	LOCK BOLT ASSEMBLY
6	783B	UHMW WASHER
7 & 8	1189	MAIN POST AND MAIN POST BACKER PLATE
9	956	WEDGELOCK TAB RECIEVER (INCLUDES #4 & #5)
10	1190	TRANSPORT BRACKET
14 & 15	1524	UPPER AND LOWER SUPPORT CHANNEL ASSEMBLY
16	1191	SWIVEL POST
17	1849	3" WASHER
19	395	6 CU. IN MANIFOLD MOUNT MOTOR
22M	117	MANIFOLD MOUNT VALVE
23	580	VALVE HANDLE WITH HOLES
25	198	6" MOTOR MOUNT PLATE
26	613	6" AUGER DISCHARGE SPOUT
27	148 x 4	6" FLEXIBLE DOWNSPOUT (4'LENGTH)
27B	149	6" HOSE CLAMP
30	532	HYDRAULIC LINE HOLDER
32	1203	HOPPER STOP
33	193 x 18	6" PVC TUBE (ordered per foot)
35	546	6" VERTICAL AUGER HOPPER ASSEMBLY includes: #549x2/548/178
35A	549	VERTICAL AUGER HOPPER CLAMP BAND
35B	548	VERTICAL AUGER HOPPER SAFETY GRILLE
37	178	HOPPER SHELL ONLY
40	1724	4" U-BOLT
		CUPPED STEEL FLIGHTING #834 X 18 5" CUPPED PLASTIC FLIGHTING #742 X 18

****ALL NUTS AND BOLTS ARE SOLD SEPARATELY ****

JOHN DEERE 1790

The JD 1790 Planter 20" (row spacing) main post mounts on the one 4"x5" wheel leg.

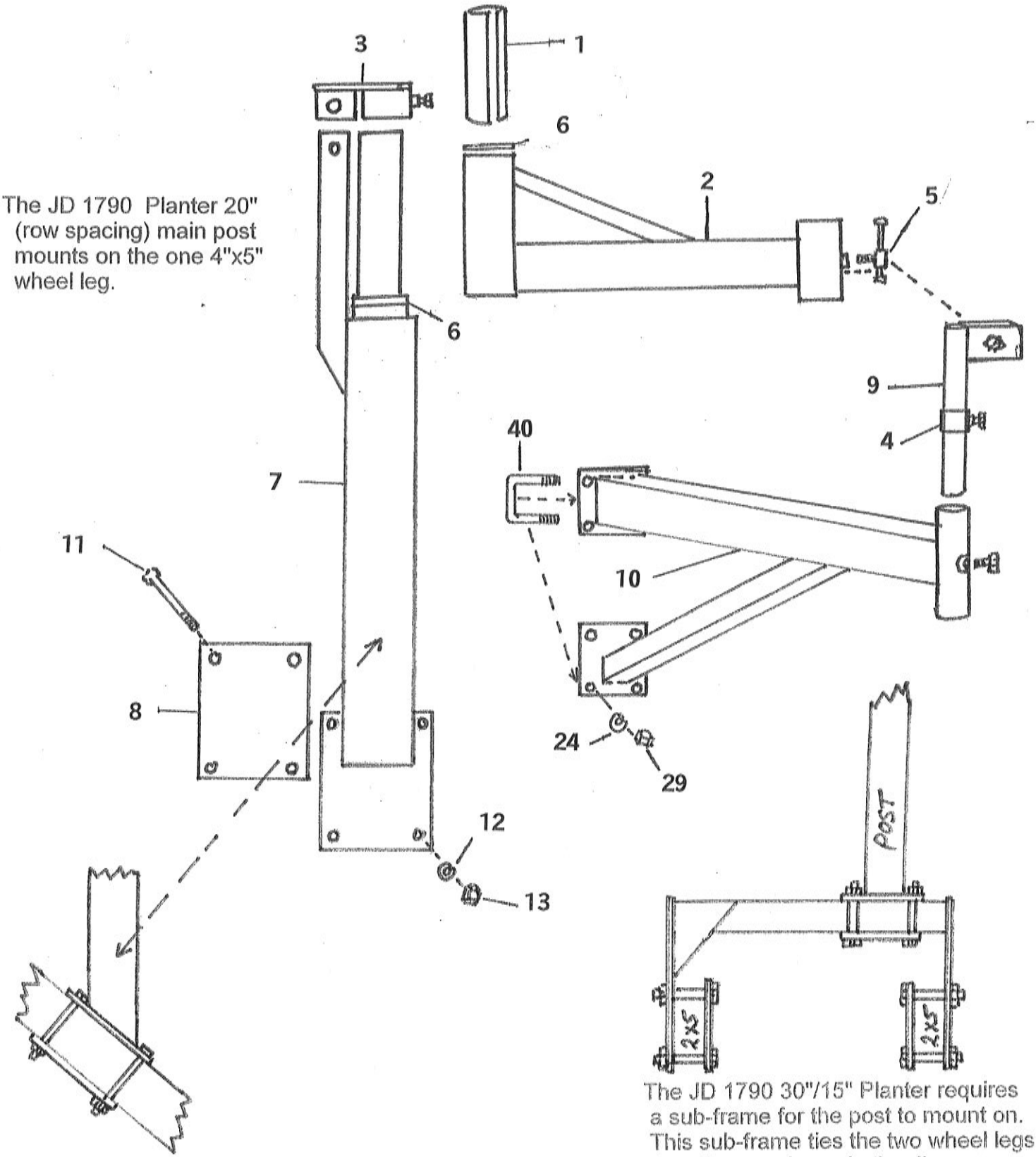

The JD 1790 30"/15" Planter requires a sub-frame for the post to mount on. This sub-frame ties the two wheel legs together as shown in the diagram.

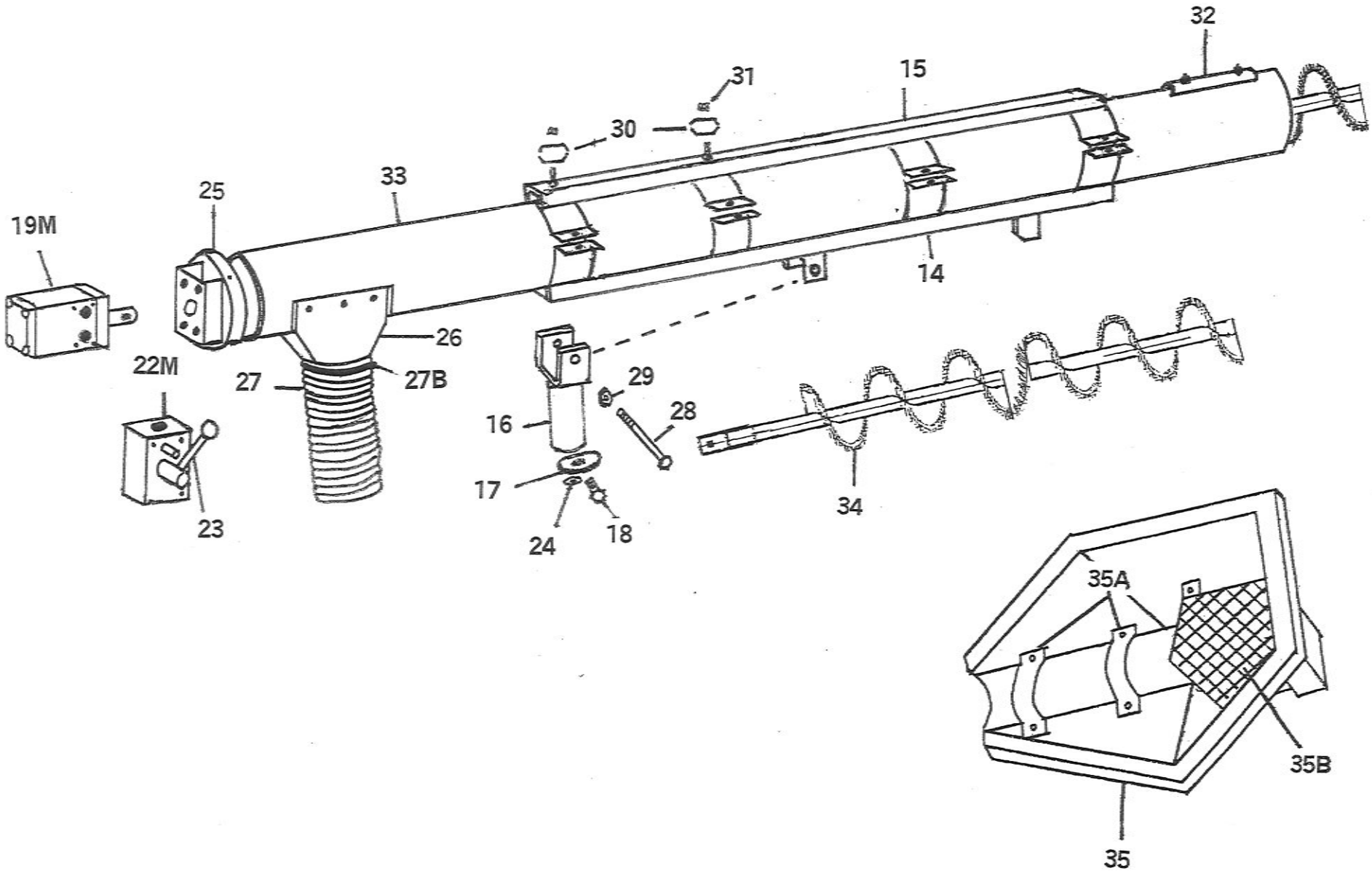

SINGLE AUGER SEED FILL
JOHN DEERE 1790

JOHN DEERE

JOHN DEERE

Mahindra

14"
9"

OPTIONAL VALVES FOR HYDRAULIC AUGERS

Note: These optional valves do not replace the shut-off valve on the auger.

A directional valve fitting can be installed to restrict the auger from running in the reverse direction. This valve should be installed on the return line, between the valve on motor and the tractor. Thread is ½" NPT. **RECOMMENDED FOR AUGERS THAT SHOULD NOT BE RUN IN REVERSE, AS IT MAY CAUSE DAMAGE TO THE FLIGHTING.**

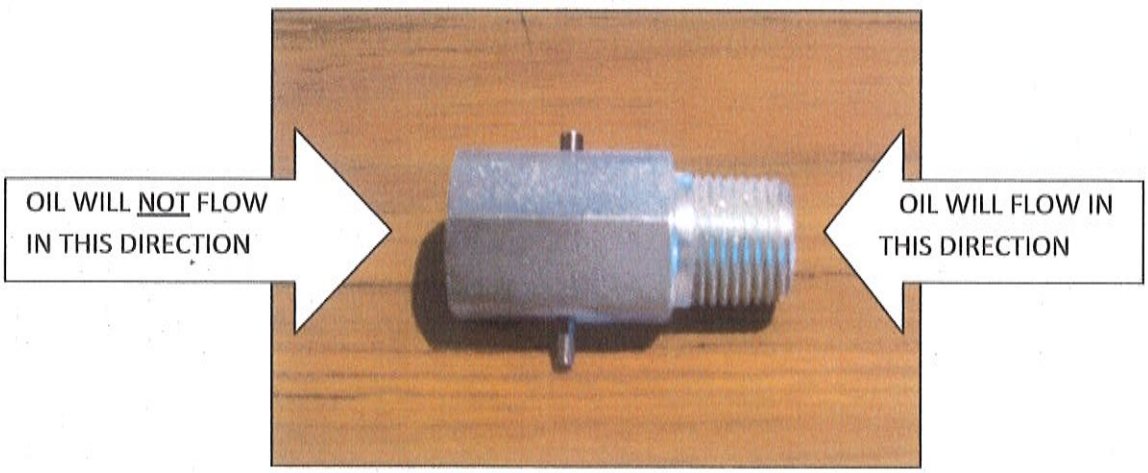

An in-line, pressure compensated, nonadjustable flow regulator valve is available for CLOSED CENTER HYDRAULIC SYSTEMS. In the controlled direction, this regulator will maintain a constant flow rate of 10 GPM. This valve should be installed on the pressure line, between the tractor and the valve on motor. Thread is ¾" NPTF (must be reduced to ½")

RECOMMENDED FOR AUGERS OPERATED BY LARGER TRACTORS WITH LARGER HYDRAULIC OUTPUT.

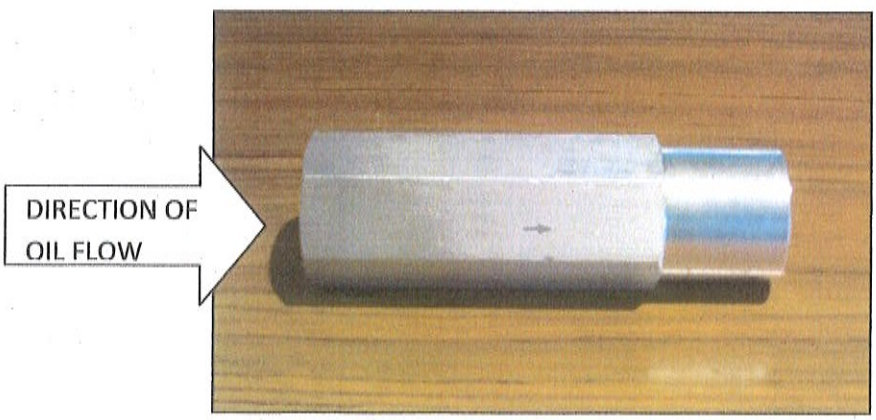

Augers operate best at 10-12 GPM & 1200-1500 PSI.

Market Farm Equipment Ltd. RR# 1 Dashwood, Ontario, Canada N0M 1N0
E-Mail mfeltd@execulink.com Web-Site www.marketfarmequipment.com

IMPORTANT

YOUR AUGERS DOWNSPOUT SHOULD NEVER BE SET DOWN OR LEFT UNATTENDED WHILE THE AUGER IS RUNNING.

MATERIAL CAN BUILD UP QUICKLY CAUSING THE DOWNSPOUT AND AUGER TO PLUG. THIS CAN DAMAGE THE AUGERS FLIGHTING AND MOTOR.

ALWAYS TURN AUGER OFF BEFORE LEAVING THE DOWNSPOUT TO ATTEND TO OTHER MATTERS.

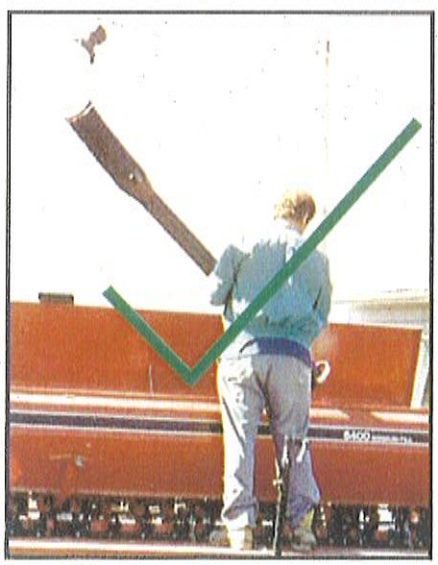

IMPORTANT OPERATING INSTRUCTIONS

1: NEVER LEAVE THE DOWNSPOUT (TELESCOPING OR FLEX) UNATTENDED WHILE THE AUGER IS RUNNING. IF IT IS NECESSARY TO LEAVE THE DOWNSPOUT, SHUT AUGER OFF.

2: NEVER HOLD THE DOWNSPOUT (TELESCOPING OR FLEX) DOWN TOO LOW. THE MATERIAL CAN BUILD UP AND PLUG THE DISCHARGE. PLUGGING AND DAMAGE TO FLIGHTING CAN OCCUR QUICKLY. TO AVOID COSTLY DOWNTIME AND REPAIR COSTS ALWAYS BE AWARE OF HOW FULL YOUR SEED/FERTILIZER HOPPERS ARE GETTING WHILE FILLING.

3: NEVER EXCEED THE MAXIMUM 15 G.P.M. HYDRAULIC INPUT. MOST AUGERS REQUIRE 9-12 GPM AT 1200-1500 PSI TO RUN PROPERLY.

4: NEVER RUN AUGER EMPTY FOR LONG PERIODS OF TIME AS THIS WILL CAUSE WEAR TO THE TUBE & FLIGHTING.

5: OPTIONAL FLOW REGULATOR VALVES (10 GPM MAX.) AND DIRECTIONAL VALVES ARE AVAILABLE.

6: OPTIONAL ELECTRIC SOLENOID VALVES ARE AVAILABLE WITH CABLE OR REMOTE SHUT-OFF/ON FEATURES.

PLEASE READ ALL SAFETY/IMPORTANT DECALS ON THE AUGER. UNDERSTANDING THE AUGERS REQUIREMENTS AND PROPER USE WILL ENSURE A LONG AND TROUBLE FREE LIFE FOR THE AUGER.