OPERATOR'S MANUAL
SET-UP INSTRUCTIONS
&
PARTS LIST

LAWN ROLLERS

MARKET FARM EQUIPMENT LIMITED, R.R.#1 DASHWOOD, ONTARIO, CANADA

TEL# 519-238-2301 FAX# 519-238-6044 E-MAIL: natashagreen13@hotmail.com

www.marketfarmequipment.com

"SERVING THE FARM INDUSTRY SINCE 1962"

WARRANTY PROCEDURE

MARKET FARM EQUIPMENT WARRANTS THEIR MANUFACTURED PRODUCTS TO BE FREE FROM DEFECTS IN MATERIAL AND WORKMANSHIP FOR A PERIOD OF ONE (1) YEAR AFTER THE DATE OF PURCHASE TO THE FIRST END USER AND IS SUBJECT TO THE FOLLOWING CONDITIONS.

1. **Damage caused by improper use, negligence, or operation beyond rated capacity, improper set-up, adjustment, or any unauthorized modifications made by the dealer or customer, shall void this warranty.**

2. **Notification of damage or warranty claims must be submitted to Market Farm Equipment (M.F.E.) within seven (7) days of the date of failure.**

3. **All defective parts must be made available by the dealer, for inspection by M.F.E. if required, and returned at the dealer's expense.**

4. **All warranty claims must be approved by M.F.E.**

5. **The labour and freight required to replace defective parts is not reimbursable.**

6. **Exchange, credit or warranty status will be based on the results of the inspection of damaged items by the manufacturer.**

7. **Credit will be issued if and when the warranty claim is approved and <u>MUST NOT</u> be deducted from the account by the dealer.**

8. **Products and/or parts not manufactured by M.F.E. are subject to their own manufacturer's warranty conditions.**

<u>WARRANTY CONSIDERATION IS ONLY VALID WHEN THE WARRANTY REGISTRATION FORM HAS BEEN RECEIVED BY MARKET FARM EQUIPMENT.</u>

MARKET FARM EQUIPMENT LIMITED

EXPRESS WARRANTY

Market Farm Equipment Limited warrants against defects in construction and materials for a period of ONE year. We reserve the right to inspect and decide whether material or construction was faulty, or whether abuse or accident voids our guarantee.

This warranty does not cover a component which fails, malfunctions or is damaged as a result of (I) improper modification or repair, (II) accident, abuse or improper use, including loading beyond the specified maximum weights and requirements (III) improper or insufficient maintenance, or (IV) normal wear and tear.

THIS WARRANTY IS EXPRESSLY IN LIEU OF ALL OTHER WARRANTIES OR CONDITIONS, EXPRESS, IMPLIED OR STATUTORY, INCLUDING ANY IMPLIED WARRANTY OF MERCHANTABILITY OR FITNESS FOR A PARTICULAR PURPOSE.

In no way shall Market Farm Equipment Limited be liable for special, direct, incidental or consequential damages of any kind, including but not limited to labour charges.

The exclusive remedy under this warranty shall be repair or replacement of the defective component at Market Farm Equipment Limited's option. This is the entire agreement between Market Farm Equipment Limited and the owner about warranty. NO M.F.E. Ltd. employee or dealer is authorized to make additional warranty on behalf of Market Farm Equipment Limited.

(Fill in the following for future reference)

Serial number:_____

Date of purchase:_____

Purchased from:_____

WARRANTY REGISTRATION

MARKET FARM EQUIPMENT LIMITED
71796A BLUEWATER HIGHWAY, ONTARIO, CANADA, N0M 1N0
Fax: 519-238-6044 E-mail: mfeltd@execulink.com

Purchaser's warranty protection on this equipment is valid only when this registration form is completed by the purchaser and returned to Market Farm Equipment Limited.

Date of purchase: _____

Type of equipment: _____

Model number: _____ Serial number: _____

PURCHASER'S SIGNATURE INDICATES:

- Acceptance of equipment, fully assembled ( ) unassembled ( )
- Receipt of operator's manual
- Clear understanding of warranty
- Receipt of instructions on special safety equipment available
- Receipt of instructions on safe and proper operating procedures

PURCHASER:

Name: _____

Signature: _____

Mailing Address: _____

Prov./State: _____ Postal/Zip Code: _____

Telephone number: _____

Purchased from: _____

THIS WARRANTY MUST BE VALIDATED BY THE MANUFACTURER

It is valid only when a copy of the registration has been received by the manufacturer at address shown.

SAFETY INSTRUCTIONS

Before using, READ and UNDERSTAND SAFETY INSTRUCTIONS.

The MARKET COMPACT ROLLER is designed for rolling lawns and should not be used to transport material, equipment or persons.

Do not use while under the influence of alcohol, medication or drugs.

This equipment should not be operated by children or persons who are unfamiliar with the MARKET COMPACT ROLLER.

Hydraulic oil leaking under pressure can cause injury. Check hydraulic hoses for wear. If hoses are worn replace immediately. Make sure all hydraulic connections are tight. Before disconnecting hydraulic lines, relieve pressure.

Stop engine and remove key when attaching or detaching the MARKET COMPACT ROLLER from the tractor.

YOUR SAFETY IS OUR MAIN CONCERN, HOWEVER IT IS UP TO THE OPERATOR TO PRACTICE CAUTION.

ASSEMBLY INSTRUCTIONS

The MARKET COMPACT ROLLER comes fully assembled unless specified differently by the dealer/customer.

OPERATING INSTRUCTIONS

Grease all grease fittings before using.

For maximum weight fill the roller(s) with water. Drain after rolling season to avoid damage to the roller drum due to freezing.

When operating the 13' 6" HYDRAULIC MARKET COMPACT ROLLER fold out the wings first prior to lowering. Raise the roller prior to folding the roller for transport/storage.

ROLLER COMPONENTS

4' ROLLER FRAME (52½") 5' ROLLER FRAME (64½") 6' ROLLER FRAME (76½")

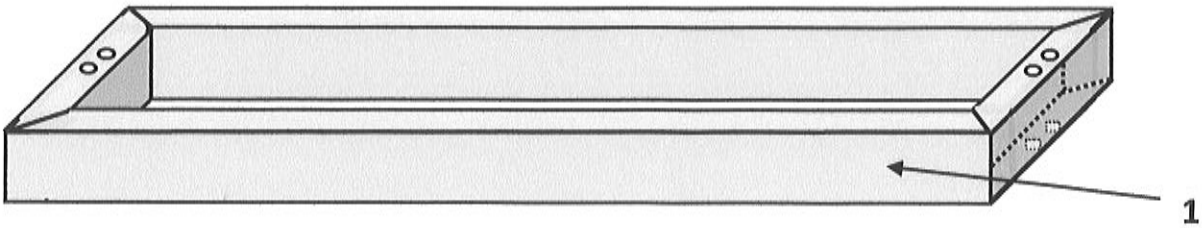

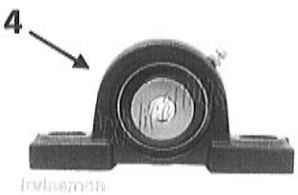

PILLOW BLOCK BEARINGS (2)
(4) ½" X 4½" BOLTS C/W FLAT WASHERS & LOCK NUTS

TONGUE
(6) ½" X 3" U-BOLTS (UB-312) C/W FLAT WASHERS & LOCK NUTS

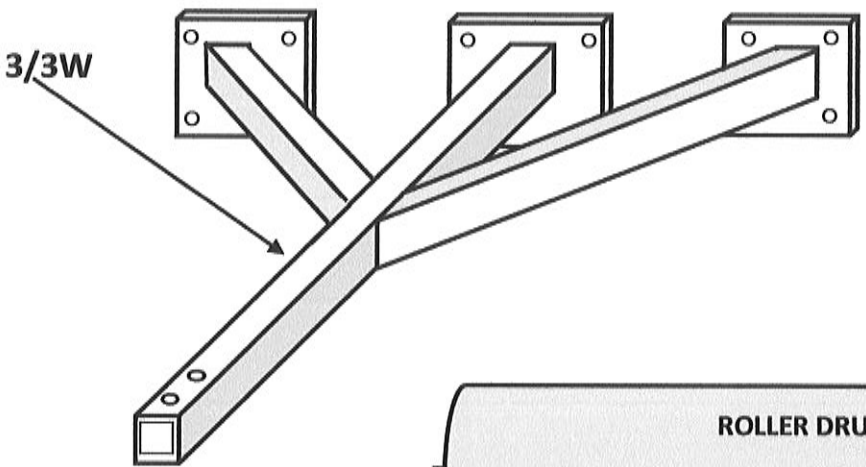

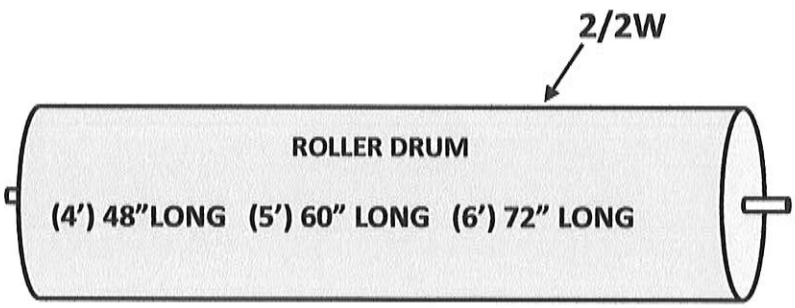

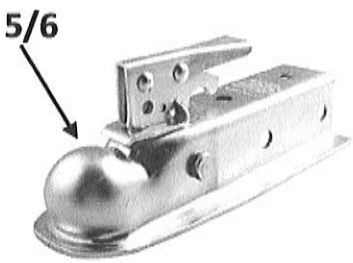

2" BALL COUPLER

ROLLER HYDRAULIC WHEEL KIT

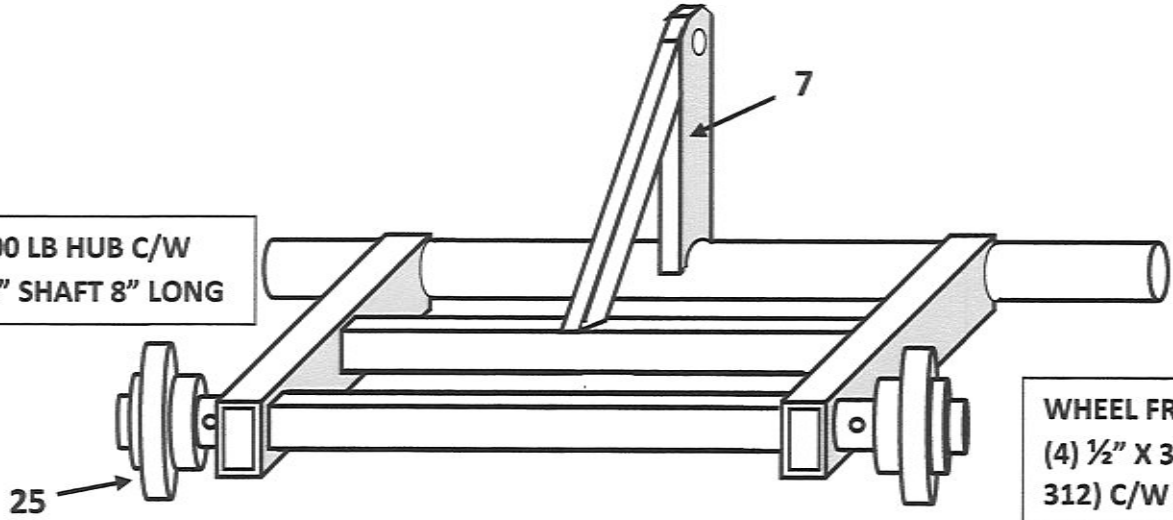

4000 LB HUB C/W
1¾" SHAFT 8" LONG

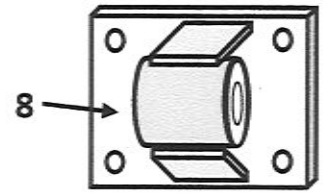

WHEEL FRAME BRACKET
(4) ½" X 3" U-BOLTS (UB-312) C/W FLAT WASHERS & LOCK NUTS

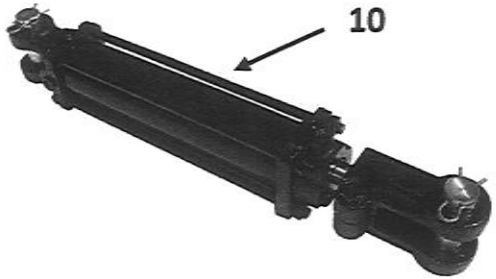

2500 PSI HYDRAULIC CYLINDER
2.5" X 8", 1.125 ROD
3/8" NPT PORTS

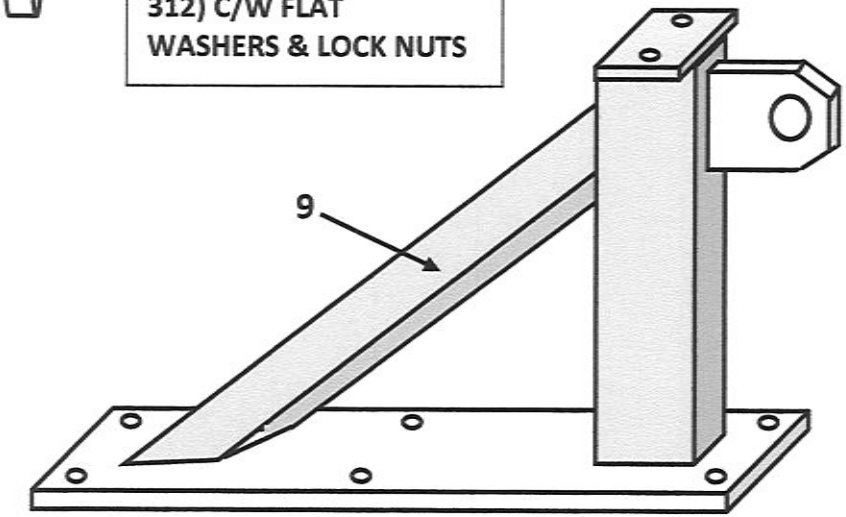

CYLINDER BRACKET
(3) ½" X 2½" U-BOLTS (UB-2) C/W FLAT WASHERS & LOCK NUTS

13’ 6” ROLLER WING FRAME

LEFT WING SHOWN

4’ WING FRAME

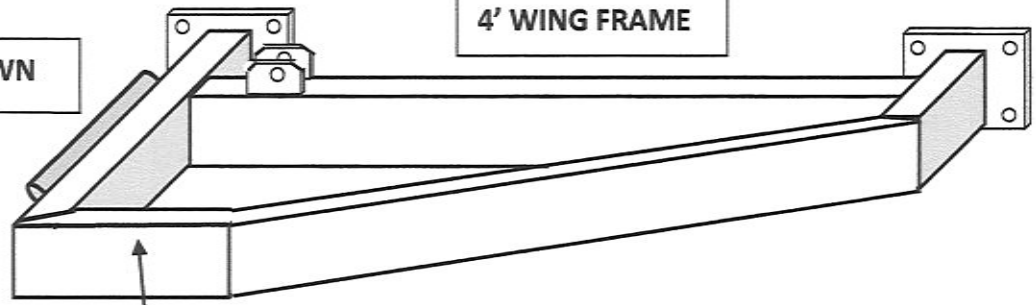

1WL (LEFT WING)
1WR (RIGHT WING)

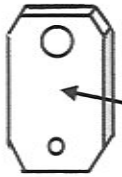

17

CYLINDER EAR

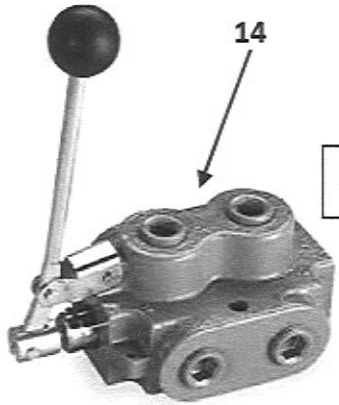

14

DOUBLE SELECTOR VALVE

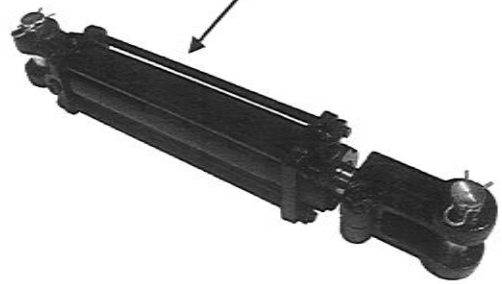

16

2500 PSI HYDRAULIC CYLINDER
2.5” X 16”, 1.125 ROD
3/8” NPT PORTS

13’ 6” ROLLER HINGE

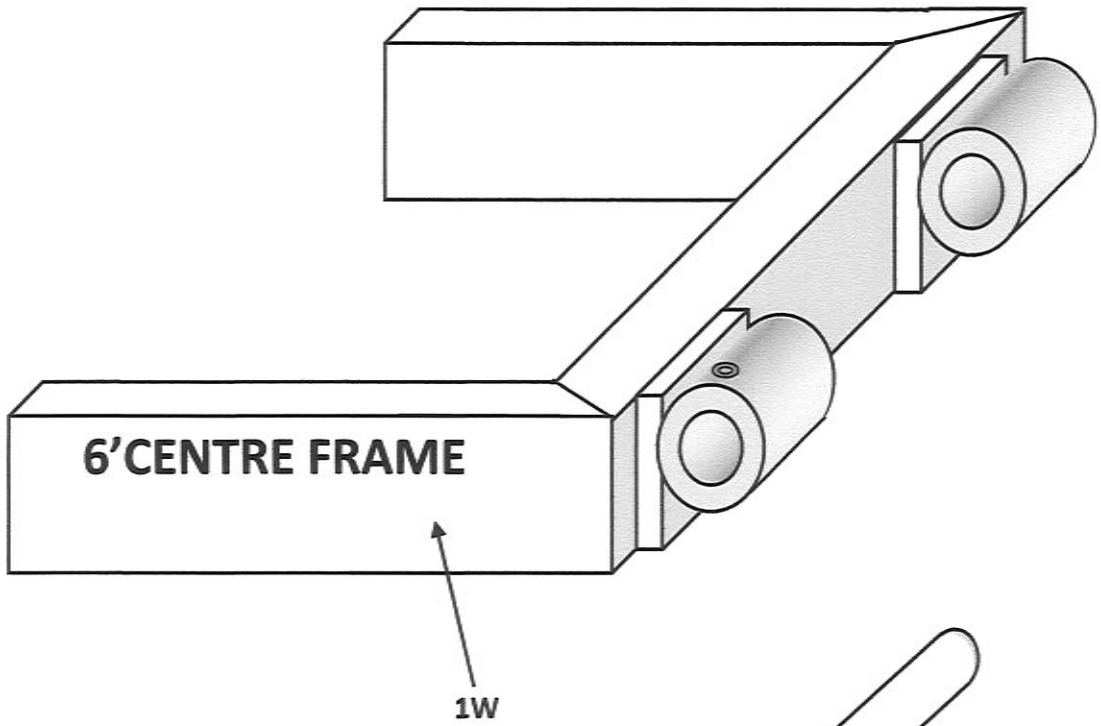

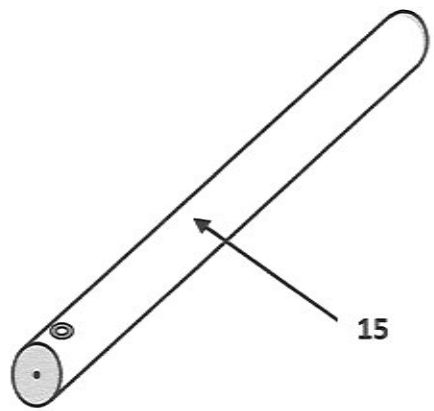

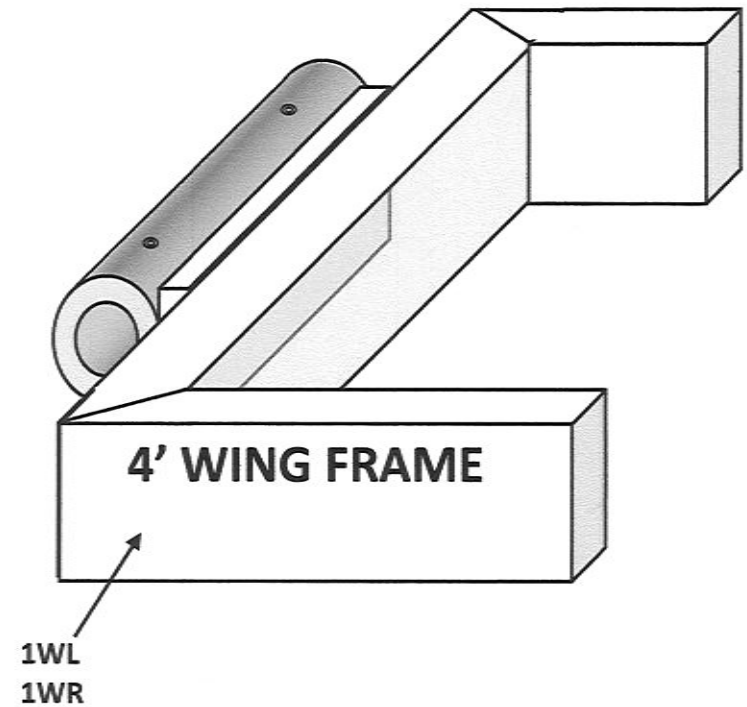

3 PT. HITCH BRACKETS FOR ROLLERS

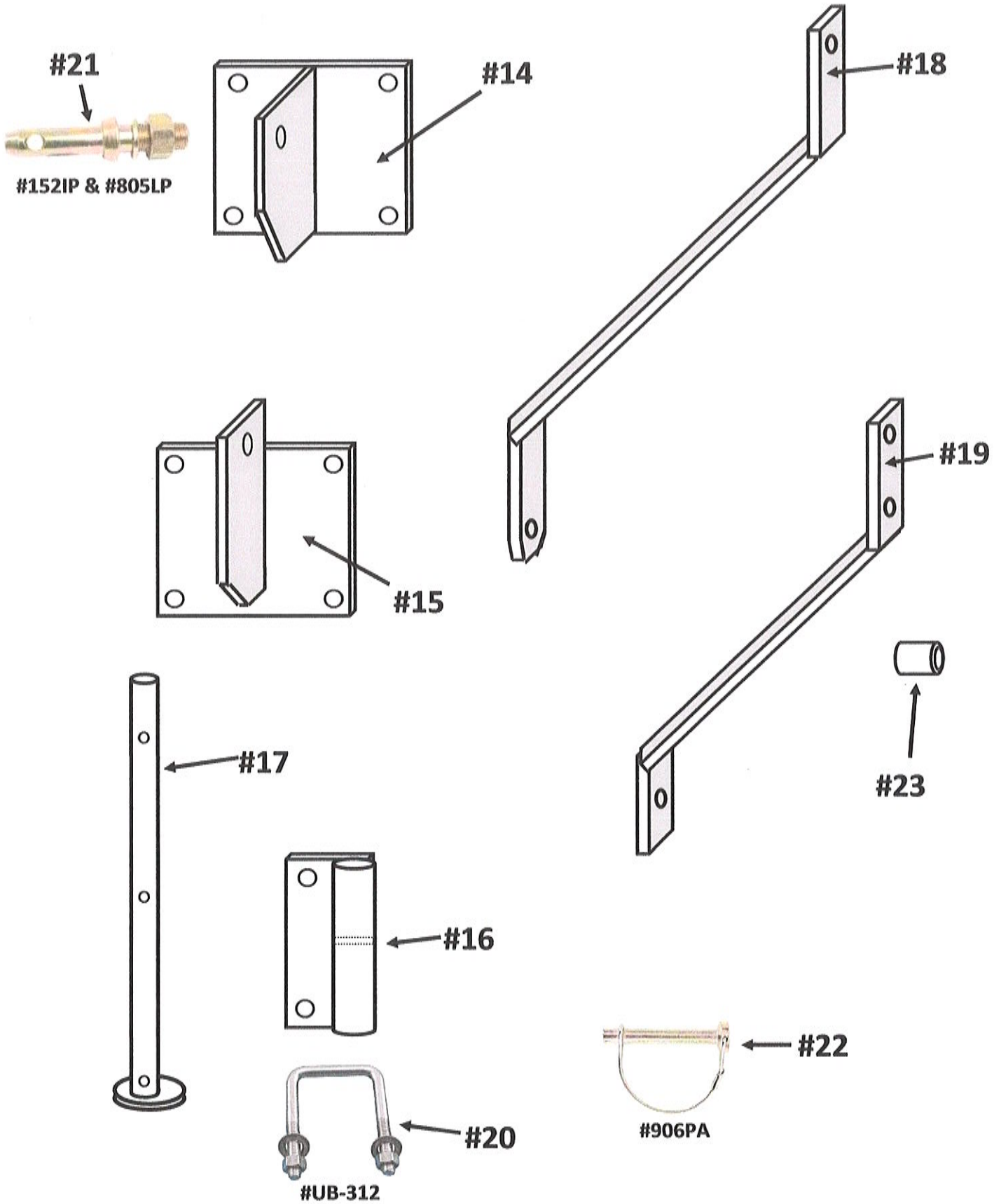

MARKET COMPACT ROLLER

REF #	DESCRIPTION	QTY 4FT.	QTY 5FT.	QTY 6FT.	QTY 13FT.6IN.
	4'/5'/6' ROLLERS				
1	4 FT FRAME (48 ¾")	1	-	-	-
	5 FT FRAME (60 ¾")	-	1	-	-
	6 FT FRAME (72 ¾")	-	-	1	-
2	4 FT ROLLER DRUM (48")	1	-	-	-
	5 FT ROLLER DRUM (60")	-	1	-	-
	6 FT ROLLER DRUM (72")	-	-	1	-
3	ROLLER TONGUE	1	1	1	-
4	PILLOW BLOCK BEARING	2	2	2	-
5	2" BALL COUPLER (2" TUBE)	1	1	1	-
	3 PT. HITCH PARTS				
14	FRONT FRAME BRACKET	2	2	2	-
15	REAR FRAME BRACKET	2	2	2	-
16	LEG BRACKET	4	4	4	-
17	LEG	4	4	4	-
18	TIE FRAME	2	2	2	-
19	FRONT FRAME	2	2	2	-
20	U-BOLT	10	10	10	-
21	LIFT ARM PIN	2	2	2	-
22	PTO PIN	4	4	4	-
23	FRONT FRAME SPACER	1	1	1	-
	HYDRAULIC WHEEL KIT FOR ROLLERS				
7	WHEEL FRAME	1	1	1	1
8	WHEEL FRAME BRACKET	2	2	2	2
9	CYLINDER BRACKET	1	1	1	1
10	HYDRAULIC CYLINDER (2½" X 8")	1	1	1	1
11*	20.5 x 8.00-10 TIRES ON 6 BOLT RIMS	2	2	2	2
12	3/8" HOSE C/W NIPPLE MKT-88	1	1	1	-
13	3/8" HOSE C/W NIPPLE MKT-72	1	1	1	2
25	4000 LB. HUB C/W 1¾" SHAFT X 8" LONG	2	2	2	2
	13' 6" FOLDING ROLLER				
1W	6 FT CENTRE FRAME (72 ¾") FOLDING UNIT	-	-	-	1
1WL	4 FT WING FRAME (48 ¾") LEFT WING	-	-	-	1
1WR	4 FT WING FRAME (48 ¾") RIGHT WING	-	-	-	1
2W	4 FT ROLLER DRUM (48")	-	-	-	2
6	2" BALL COUPLER (2½" TUBE)	-	-	-	1
3W	ROLLER TONGUE FOLDING UNIT	-	-	-	1
14	DOUBLE SELECTOR VALVE	-	-	-	1
15	WING PIN	-	-	-	2
16	HYDRAULIC CYLINDER (2½" X 16")	-	-	-	2
17	CYLINDER EAR	-	-	-	2
18*	3/8" HOSE MKT-30	-	-	-	2
19*	3/8" HOSE MKT-12	-	-	-	3
20*	3/8" HOSE MKT-20	-	-	-	2
21*	3/8" HOSE MKT-22	-	-	-	1
22*	REDUCERS ¾" TO ½"	-	-	-	6
23*	90 DEGREE FITTINGS	-	-	-	10
24*	½" TEES	-	-	-	2
* PARTS ARE NOT SHOWN IN DIAGRAMS					