OPERATOR'S MANUAL
SET-UP INSTRUCTIONS
&
PARTS LIST

SEED FILL CROSS AUGER & VERTICAL AUGER FOR JOHN DEERE 750/1560/1590 DRILLS

MARKET FARM EQUIPMENT LIMITED, R.R.#1 DASHWOOD, ONTARIO, CANADA

TEL# 519-238-2301 FAX# 519-238-6044 E-MAIL: mfeltd@execulink.com

www.marketfarmequipment.com

"SERVING THE FARM INDUSTRY SINCE 1962"

WARRANTY PROCEDURE

MARKET FARM EQUIPMENT WARRANTS THEIR MANUFACTURED PRODUCTS TO BE FREE FROM DEFECTS IN MATERIAL AND WORKMANSHIP FOR A PERIOD OF ONE (1) YEAR AFTER THE DATE OF PURCHASE TO THE FIRST END USER AND IS SUBJECT TO THE FOLLOWING CONDITIONS.

1. **Damage caused by improper use, negligence, or operation beyond rated capacity, improper set-up, adjustment, or any unauthorized modifications made by the dealer or customer, shall void this warranty.**

2. **Notification of damage or warranty claims must be submitted to Market Farm Equipment (M.F.E.) within seven (7) days of the date of failure.**

3. **All defective parts must be made available by the dealer, for inspection by M.F.E. if required, and returned at the dealer's expense.**

4. **All warranty claims must be approved by M.F.E.**

5. **The labour and freight required to replace defective parts is not reimbursable.**

6. **Exchange, credit or warranty status will be based on the results of the inspection of damaged items by the manufacturer.**

7. **Credit will be issued if and when the warranty claim is approved and MUST NOT be deducted from the account by the dealer.**

8. **Products and/or parts not manufactured by M.F.E. are subject to their own manufacturer's warranty conditions.**

WARRANTY CONSIDERATION IS ONLY VALID WHEN THE WARRANTY REGISTRATION FORM HAS BEEN RECEIVED BY MARKET FARM EQUIPMENT.

WARRANTY REGISTRATION

MARKET FARM EQUIPMENT LIMITED
71796A BLUEWATER HIGHWAY, ONTARIO, CANADA, N0M 1N0
Fax: 519-238-6044 E-mail: mfeltd@execulink.com

Purchaser's warranty protection on this equipment is valid only when this registration form is completed by the purchaser and returned to Market Farm Equipment Limited.

Date of purchase: _____

Type of equipment: _____

Model number: _____ Serial number: _____

PURCHASER'S SIGNATURE INDICATES:

- Acceptance of equipment, fully assembled ( ) unassembled ( )
- Receipt of operator's manual
- Clear understanding of warranty
- Receipt of instructions on special safety equipment available
- Receipt of instructions on safe and proper operating procedures

PURCHASER:

Name: _____

Signature: _____

Mailing Address: _____

Prov./State: _____ Postal/Zip Code: _____

Telephone number: _____

Purchased from: _____

THIS WARRANTY MUST BE VALIDATED BY THE MANUFACTURER

It is valid only when a copy of the registration has been received by the manufacturer at address shown.

MARKET FARM EQUIPMENT LIMITED

EXPRESS WARRANTY

Market Farm Equipment Limited warrants against defects in construction and materials for a period of ONE year. We reserve the right to inspect and decide whether material or construction was faulty, or whether abuse or accident voids our guarantee.

This warranty does not cover a component which fails, malfunctions or is damaged as a result of (I) improper modification or repair, (II) accident, abuse or improper use, including loading beyond the specified maximum weights and requirements (III) improper or insufficient maintenance, or (IV) normal wear and tear.

THIS WARRANTY IS EXPRESSLY IN LIEU OF ALL OTHER WARRANTIES OR CONDITIONS, EXPRESS, IMPLIED OR STATUTORY, INCLUDING ANY IMPLIED WARRANTY OF MERCHANTABILITY OR FITNESS FOR A PARTICULAR PURPOSE.

In no way shall Market Farm Equipment Limited be liable for special, direct, incidental or consequential damages of any kind, including but not limited to labour charges.

The exclusive remedy under this warranty shall be repair or replacement of the defective component at Market Farm Equipment Limited's option. This is the entire agreement between Market Farm Equipment Limited and the owner about warranty. NO M.F.E. Ltd. employee or dealer is authorized to make additional warranty on behalf of Market Farm Equipment Limited.

(Fill in the following for future reference)

Serial number:_____

Date of purchase:_____

Purchased from:_____

SAFETY INFORMATION

- Before using auger READ and UNDERSTAND SAFETY INSTRUCTIONS.
- After hydraulic lines are connected, run auger empty to ensure the flighting is rotating in the proper direction. (if ran backwards, damage may occur)
- Auger should be empty when moving or transporting.
- Hydraulic oil leaking under pressure can cause injury. Make sure all hydraulic connections are tight. Before disconnecting hydraulic lines, relieve pressure.
- Do not adjust, clean or service auger while it is running.
- Keep all safety shields in place. Replace any safety decals that become lost or damaged.
- Do not operate the auger in a manner that it was not intended for.
- When transporting, always keep auger in its lowest position.

HYDRAULIC SYSTEM OPERATING RESTRICTIONS

MAXIMUM FLOW – 15 G.P.M. MAXIMUM PRESSURE – 1750 P.S.I.

MAXIMUM FLOW AND MAXIMUM PRESSURE conditions MUST NOT occur simultaneously. Damage will occur and, warranty will be void. Use only ½" hydraulic hose when plumbing. A smaller hose will create heat that will burn out the hydraulic motor, and, warranty will be void.

Do not tee into hydraulic lift cylinders on planters or drills.

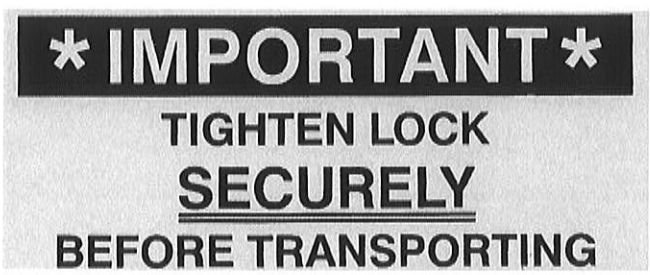

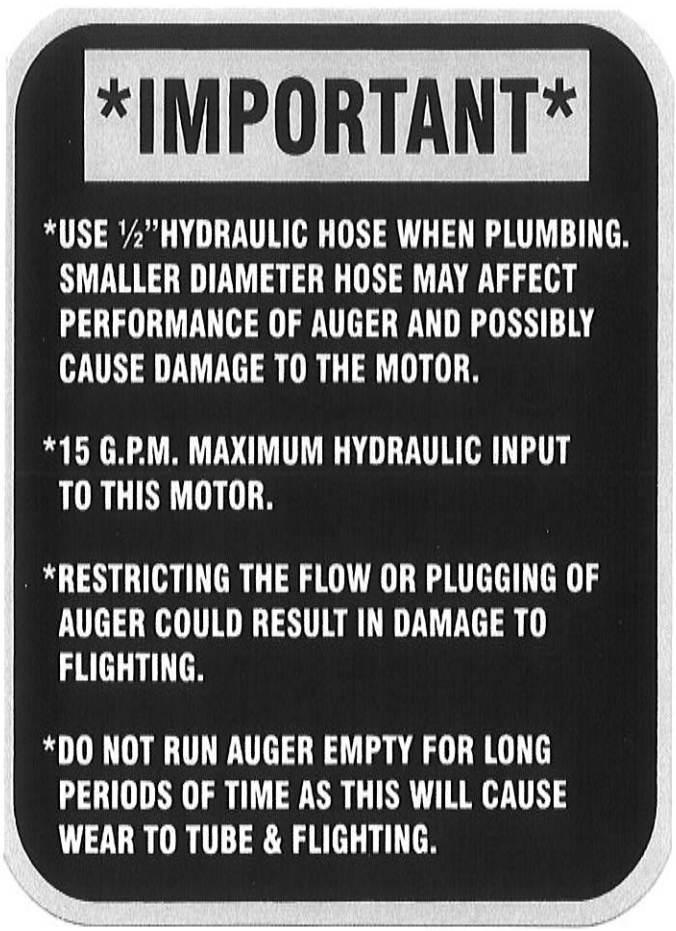

MOUNTING DIAGRAM FOR UPRIGHT POSTS

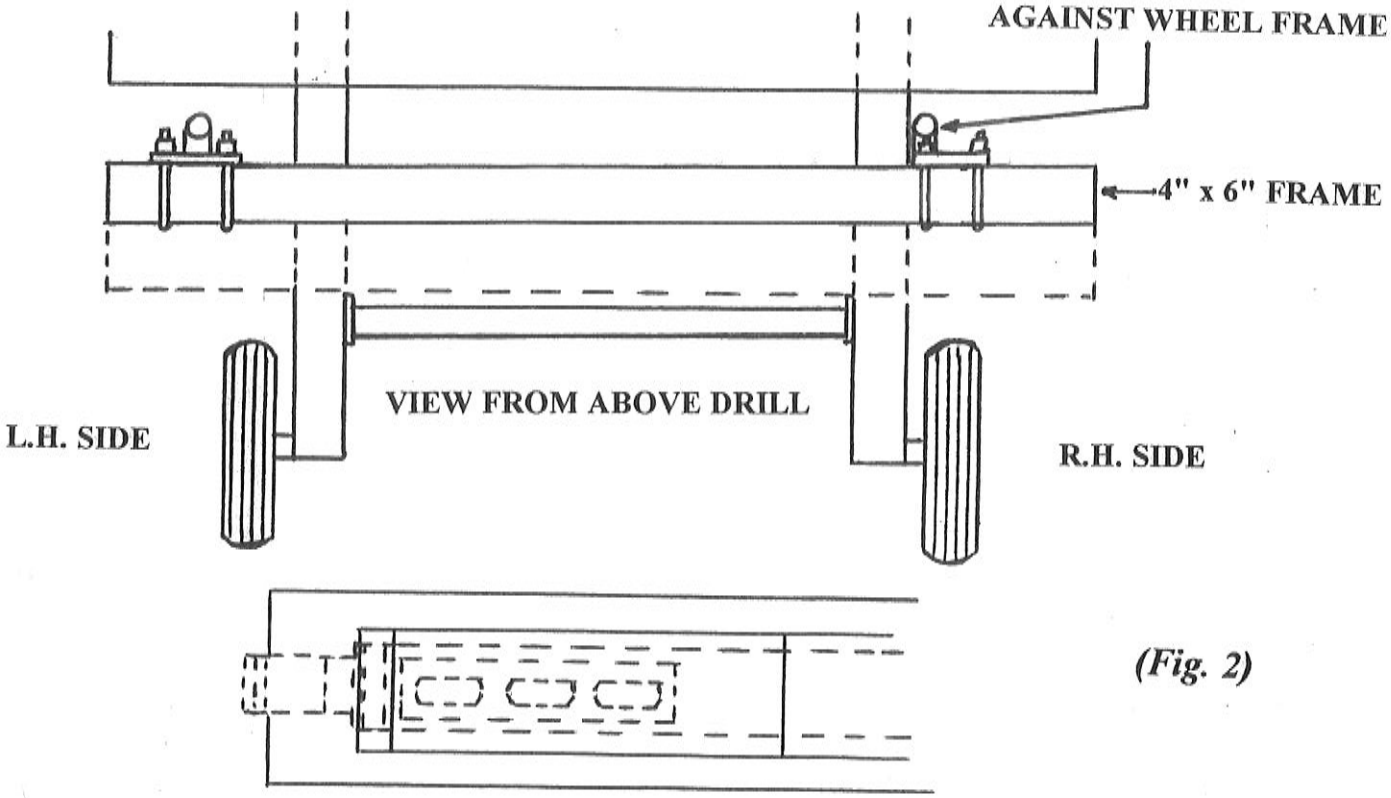

(Fig. 2)

1st DROP POSITION STARTS AT EDGE OF LIP INSIDE HOPPER OPENING

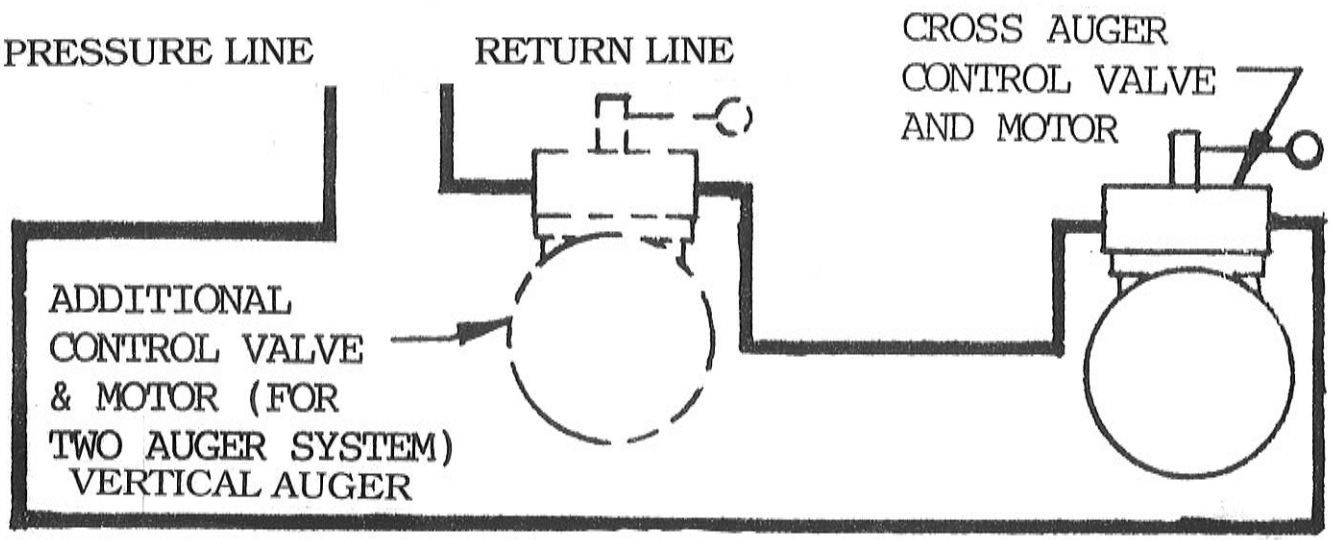

December 19, 2002

SEED FILL CROSSAUGER MOUNTING INSTRUCTIONS FOR 15' & 20' John Deere 750 / 1560 / 1590 Drill

1. **Set crossauger on closed lid of drill, end of motor should be even with end of seed tank.**

2. **On 15' drills locking post (17 / 17A) is mounted on left side and regular post (18 / 18A) on right. On 20' drills locking post (17 / 17A) is mounted on left side and 2 non locking posts (18 / 18A) on center and right side.**

   NOTE: MAKE SURE UPRIGHT POSTS ARE PERFECTLY PLUMB

3. **Remove adjustable stops (15) and slide crossarms (11 & 12) onto upright posts making sure plastic washers (6) and plastic sleeves (16) are in place. The guide bushing (13) may need to be turned to allow guide to fit between lock pins on crossarm on locking post.**

4. **Set auger on crossarms making sure plastic discs (10) are on bolts before going through holes in crossarms. (Loosening of clamp bands may be necessary). Tighten nut on bolt until it is up against crossarm. DO NOT OVER TIGHTEN.**

5. **Mount adjustable stops (15) loosely.**

6. **Swing auger as far as needed to clear the hopper lid, set adjustable stops against crossarms, then tighten.**

7. **Swing auger to filling position so that crossarms are at 90° to the auger tube, then tighten ½" bolt on guide bushing.**

8. **Swing auger back and forth a few times to check for proper alignment.**

December 19, 2002

INSTRUCTIONS FOR VERTICAL AUGER
JOHN DEERE 750 / 1560 / 1590 DRILL

1. **Install vertical auger frame weldment post (7) to 4" x 6" frame using 1/2" x 8 1/2" bolts, nuts, lock washers and backer plate. (Fig. 1)**

   NOTE:
   To determine position, measure from inside of wheel frame to center of frame weldment post. (15' - 20 1/2" and 20' - 34").

2. **Mount stabilizer mounting tab bracket (51) on outside of wheel frame using existing 2 bolts and nuts. (Fig. 2)**

3. **Attach stabilizer brace (49/50 - outer) to tab on frame weldment post and the other end to the stabilizer mounting tab (51) with 3/8" x 1 1/4" bolts and lock nuts.**

4. **Slide the swing arm (2) onto the post, take caution not to damage plastic sleeve (1) inside 2 1/2" x 10" bushing. (Fig. 1)**

5. **Mount auger by inserting the pivot support tube (52) into the swing arm (2), install pivot support collar (53) and attach with a 3/8" x 2" bolt and lock nut. (Fig. 3)**

6. **Install the transport bracket (10) on R.H. side of weigh bar.**

7. **Place auger in transport bracket wedge lock receiver (9) and tighten using lock bolt (5) as well tighten the lock bolt (5) on the swing arm. Rotate hopper to eliminate dirt and water buildup.**

OPERATING INSTRUCTIONS

Release lock bolts on transport bracket wedge lock and swing arm. Swing auger into filling position so that auger spout is directly over crossauger fill hopper.

NOTE:
Before transporting, make sure both the wedge lock and swing arm lock bolts are tightened.

FIG. 1

FIG. 2

FIG. 3

SEED FILL CROSS AUGER JOHN DEERE 750/1560/1590

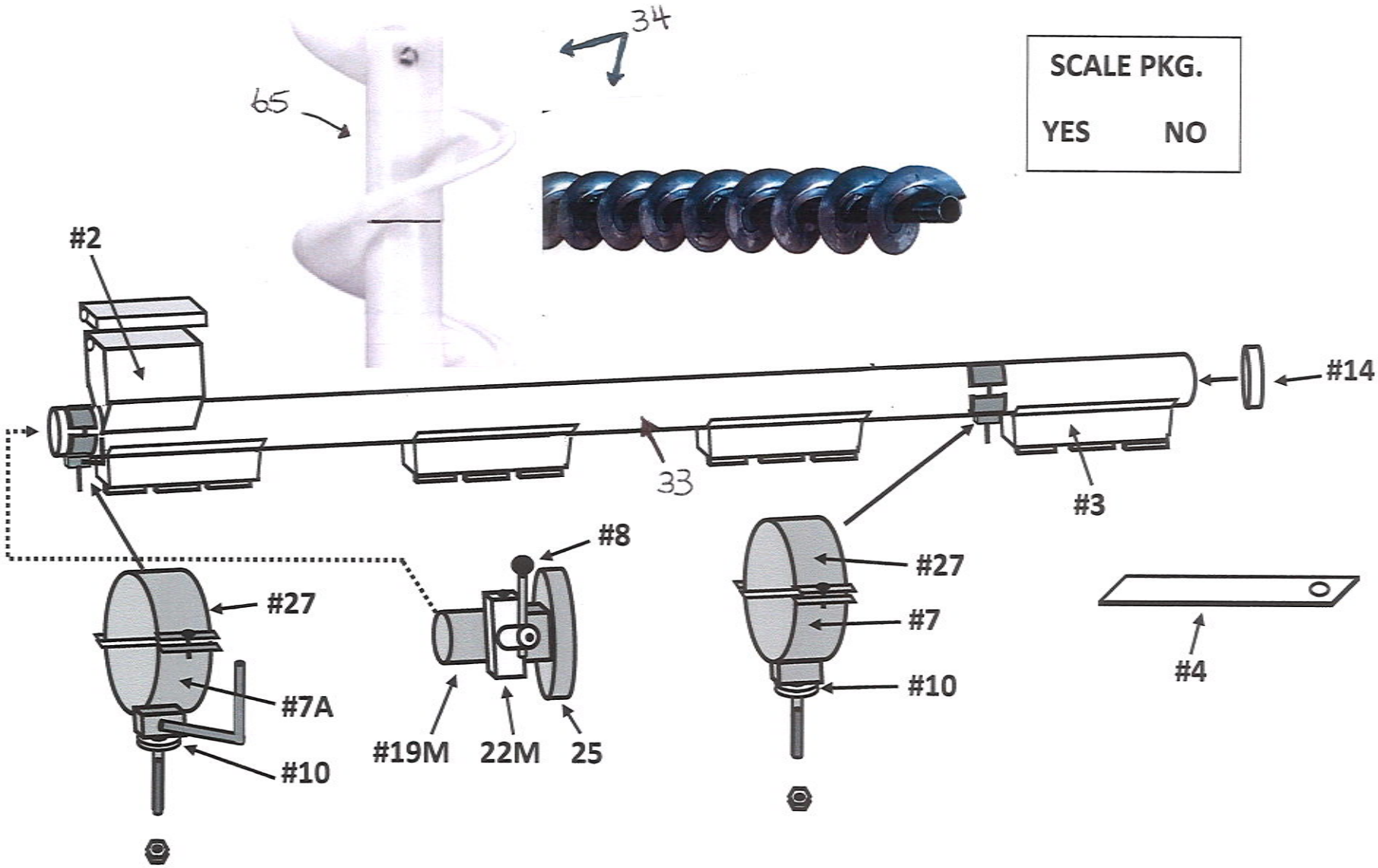

SEED FILL CROSSAUGER 15' JOHN DEERE 750/1560/1590

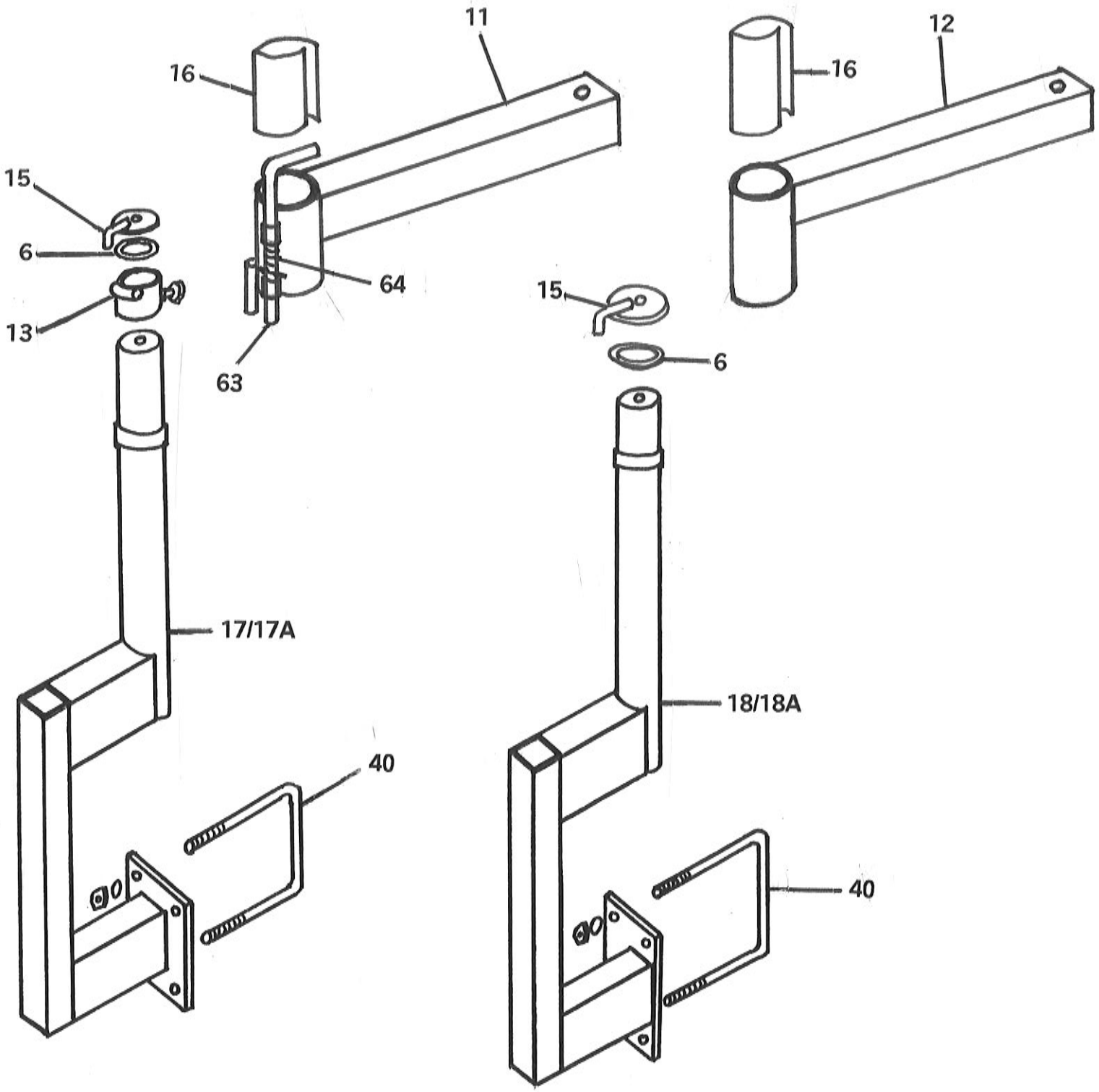

6" SEED FILL CROSS AUGER JD 750/1560/1590
PARTS LIST

REF #	PRO CD	DESCRPTION
2	195	6" CROSS AUGER HOPPER & LID ASSY W/ #5
2A	654	CROSS AUGER HOPPER & LID ONLY
2B	547	SAFETY SCREEN (FOR HOPPER) (NOT SHOWN)
3	196	6" PLASTIC FERTILIZER DROP
4	197	SHUT OFF SLIDE FOR FERTILIZER DROP
6	783B	UHMW PLASTIC WASHER
7		PIVOT BRACKET CLAMP BAND ASSY (C/W #7, 10, & #27
7A	957	PIVOT BRACKET CLAMP BAND ASSY **W/ HANDLE** (C/W #7A, #10 & #27)
	581	VALVE HANDLE WITH BLACK KNOB
10	1128	UHMW DISC
11	1196B	S/F LOCKING CROSS ARM (W/ #11, #64 & #63)
12	1196	S/F CROSS ARM (W/ #11)
13	1337	LOCK GUIDE BUSHING
14	398	PLASTIC OVERFLOW CAP W/ HOLE (OLD)
14	535	6" END BEARING/OVERFLOW PLATE
14A	780	6" END BEARING/OVERFLOW ASSEMBLY
15		ADJUSTABLE STOP
16	1486	4" UHMW PLASTIC SLEEVE
17	1197	LOCKING POST (LEFT HAND)
18	1197B	REGULAR POST (RIGHT HAND)
19M	395	6 CUBIC INCH MOTOR
22M	117	MANIFOLD MOUNT VALVE
25	198	6" MOTOR MOUNT PLATE
27	181	½ PLAIN CLAMP BAND
33	193 x ___	6" PVC TUBE (SPECIFY LENGTH)
34		FLIGHTING – 5" CUPPED PLASTIC (742) X ____ FT OR CUPPED STEEL (834) X ____ FT. SPECIFY LENGTH
40	1494	6" U-BOLT
63/64		LOCK HANDLE & SPRING
65		5" CUPPED PLASTIC MODULE #525 5" CUPPED PLASTIC MODULE W/ GUSSET #525G (TOP & BOTTOM ONLY)

ALL NUTS & BOLTS SOLD SEPERATELY

15' SEED-FILL VERTICAL AUGER JD 750/1560/1590

TUBE LENGTH: 158 3/8"
15' BRISTLE FLIGHTING

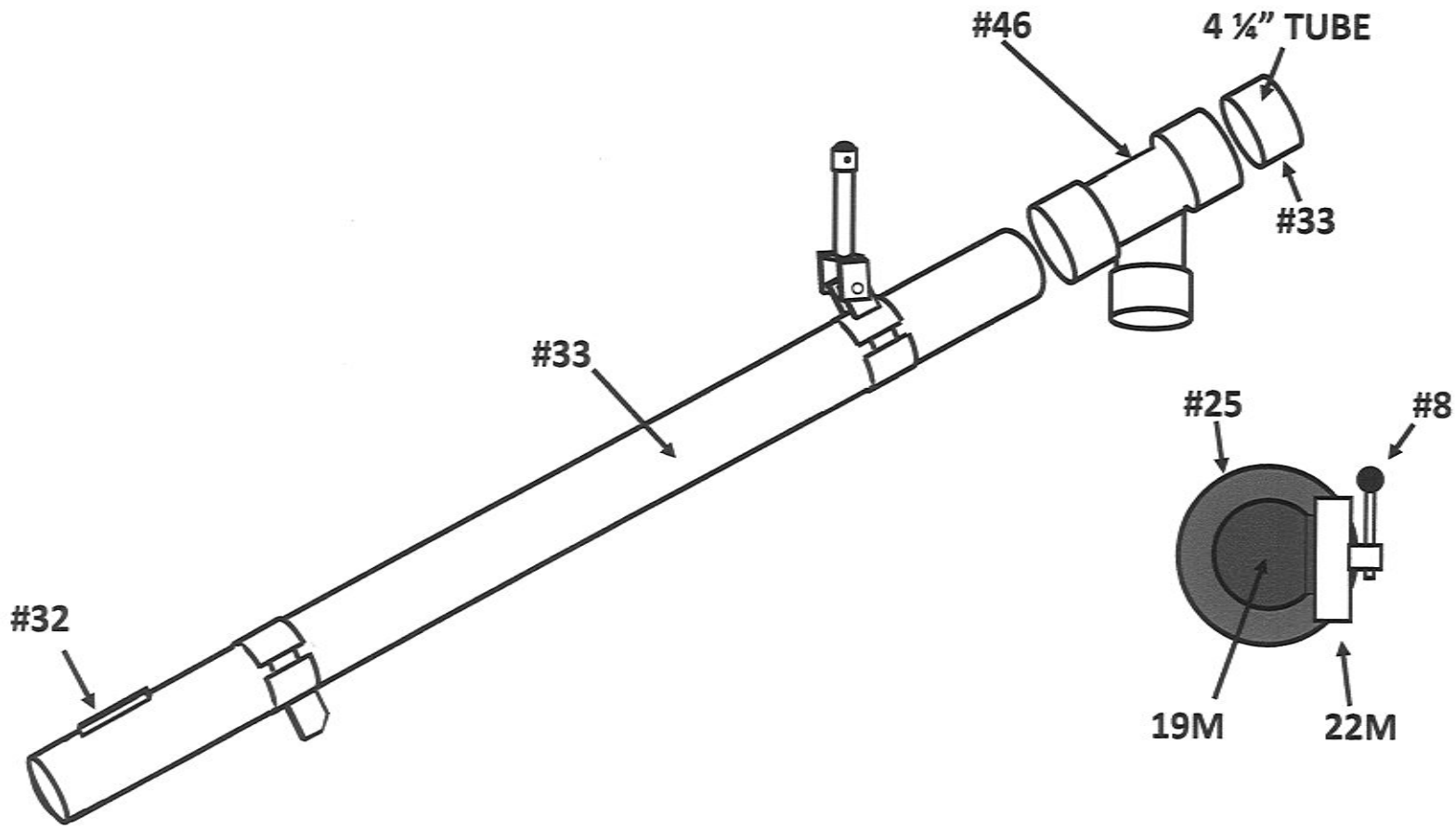

**REQUIRES 6" VERTICAL HOPPER ASS.

15' SEED-FILL VERTICAL AUGER JD 750/1590 HDWE

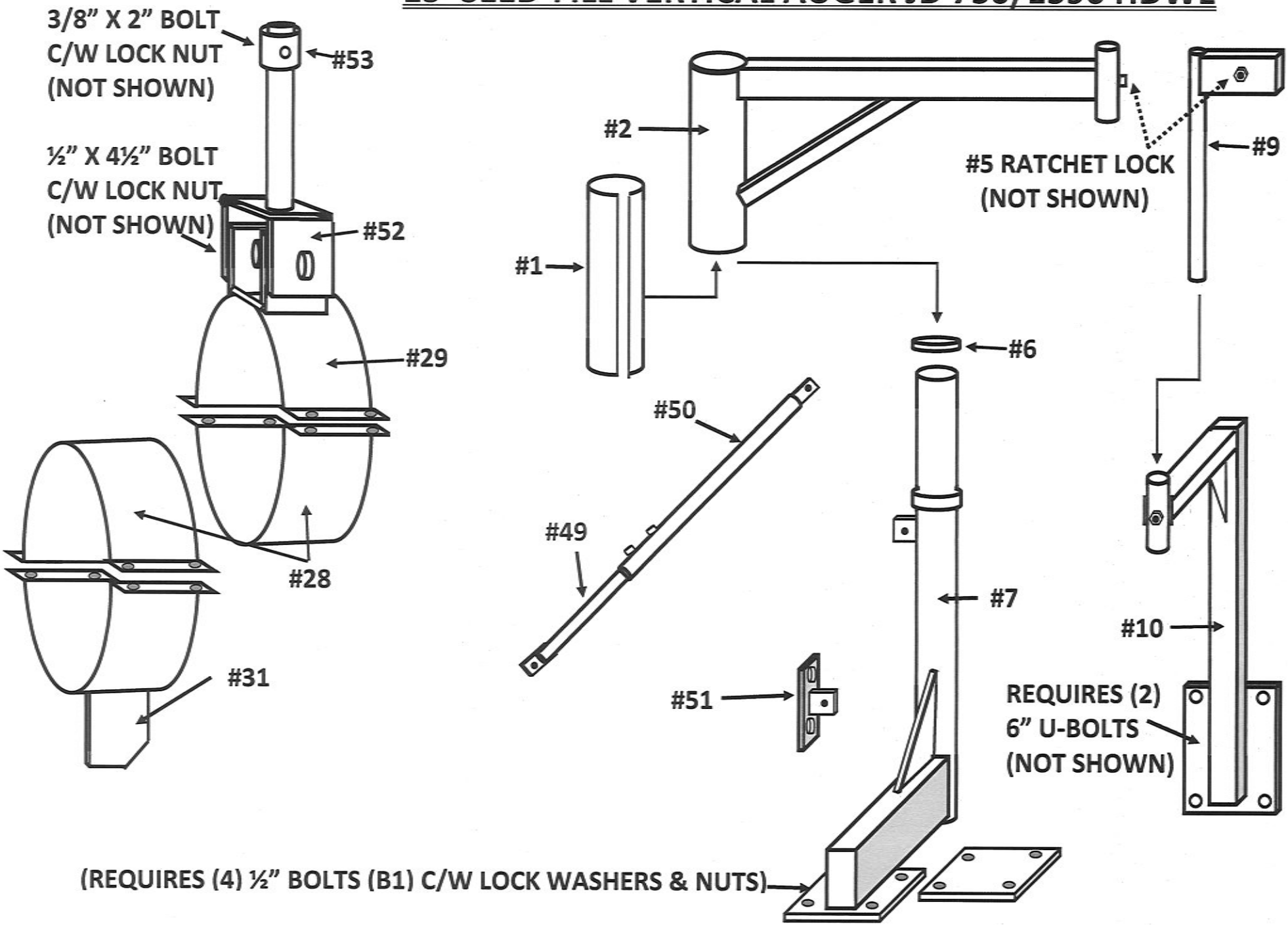

6" SEED FILL VERTICAL AUGER JD 750/1560/1590
PARTS LIST

REF #	PRO CD	DESCRPTION
1	1485	9 ½" PLASTIC SLEEVE
2	564	SWING ARM
5	1175	U-BOLT ASSY
6	783B	UHMW PLASTIC WASHER
7	1198	FRAME WELDMENT C/W #7
8	581	VALVE HANDLE W/ BLACK KNOB
9	956	WEDGELOCK RECEIVER
10	842	TRANSPORT BRACKET
19M	395	6 CUBIC INCH MOTOR
22M	117	MANIFOLD MOUNT VALVE
25	198	6" MOTOR MOUNT PLATE
28	552	½ PLAIN CLAMP BAND (4 HOLE)
29	955	PIVOT CLAMP BAND ASSY C/W #28, #52, & #53
31	762	TRANS LOCK TAB CLAMP BAND ASSY C/W #28
32	1203	HOPPER STOP
33	193 x ___	6" PVC TUBE (SPECIFY LENGTH)
34		FLIGHTING – 5" CUPPED PLASTIC (742) X ____ FT OR CUPPED STEEL (834) X ____ FT. SPECIFY LENGTH
35	546	6" VERTICAL AUGER HOPPER ASSEMBLY (C/W #35A,35B, & 35C) NOT SHOWN
35A	548	SAFETY SCREEN FOR V/A HOPPER
35B	549	CLAMP BAND FOR 6" V/A HOPPER
35C	178	6" VERTICAL AUGER HOPPER PLASTIC SHELL ONLY
46	542	PLASTIC "Y" FITTING
49/50	1338	INNER & OUTER BRACE
51		BRACE MOUNTING BRACKET

ALL NUTS & BOLTS SOLD SEPERATELY

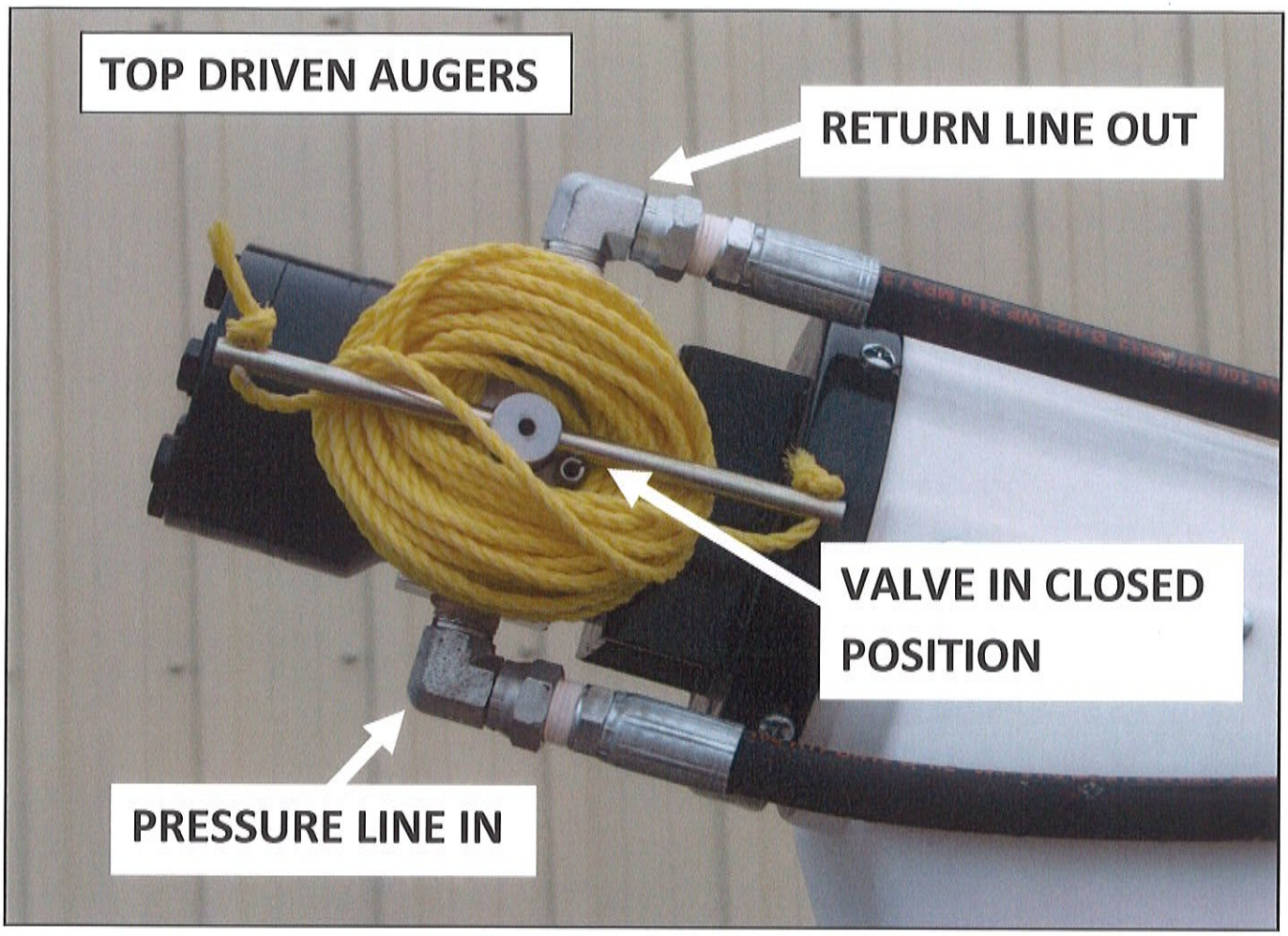
TOP DRIVEN AUGERS
RETURN LINE OUT
VALVE IN CLOSED POSITION
PRESSURE LINE IN

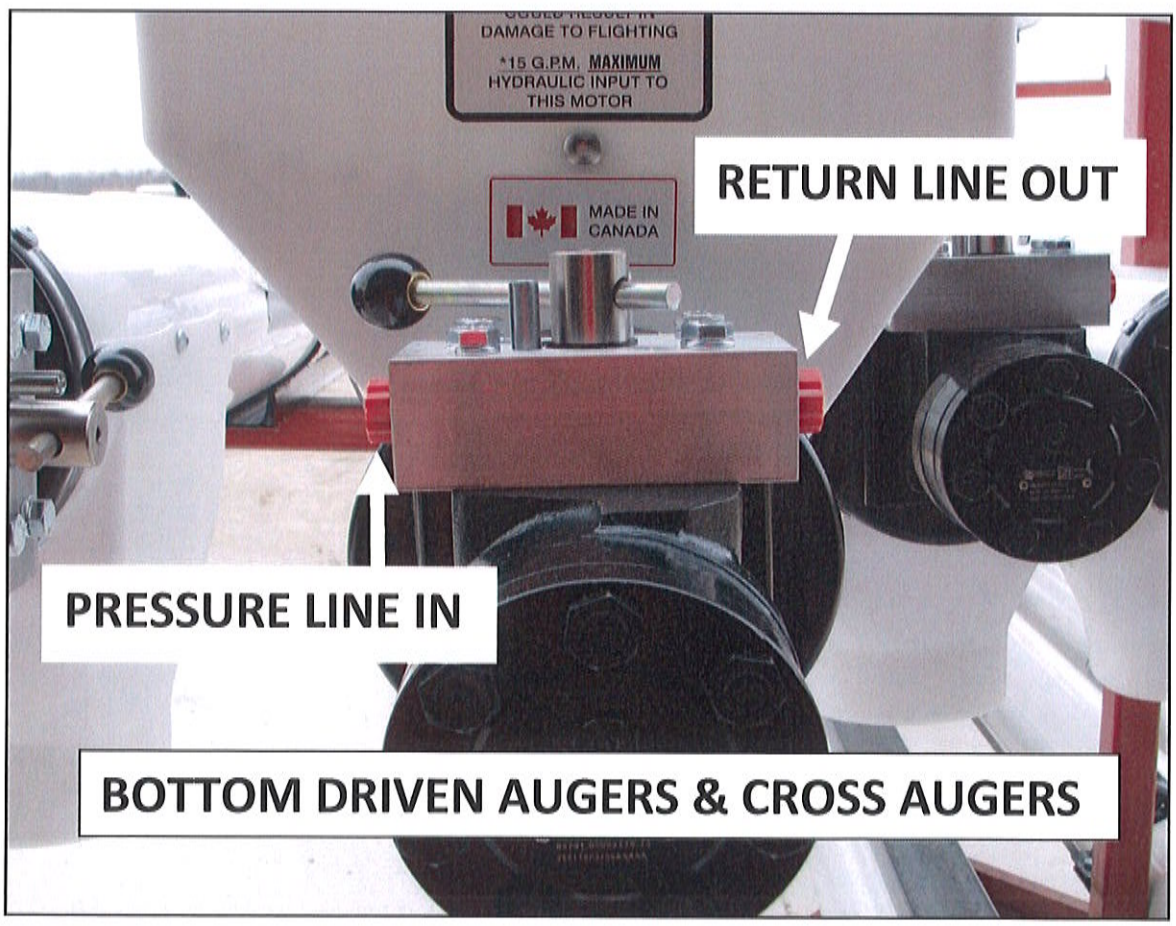
DAMAGE TO FLIGHTING
*15 G.P.M. MAXIMUM
HYDRAULIC INPUT TO
THIS MOTOR
MADE IN
CANADA
RETURN LINE OUT
PRESSURE LINE IN
BOTTOM DRIVEN AUGERS & CROSS AUGERS