OPERATOR'S MANUAL
SET-UP INSTRUCTIONS
&
PARTS LIST

6"/8" TRANSFER AUGER

MARKET FARM EQUIPMENT LIMITED, R.R.#1 DASHWOOD, ONTARIO, CANADA

TEL# 519-238-2301 FAX# 519-238-6044 E-MAIL natashagreen13@hotmail.com

www.marketfarmequipment.com

"SERVING THE FARM INDUSTRY SINCE 1962"

WARRANTY PROCEDURE

MARKET FARM EQUIPMENT WARRANTS THEIR MANUFACTURED PRODUCTS TO BE FREE FROM DEFECTS IN MATERIAL AND WORKMANSHIP FOR A PERIOD OF ONE (1) YEAR AFTER THE DATE OF PURCHASE TO THE FIRST END USER AND IS SUBJECT TO THE FOLLOWING CONDITIONS.

1. **Damage caused by improper use, negligence, or operation beyond rated capacity, improper set-up, adjustment, or any unauthorized modifications made by the dealer or customer, shall void this warranty.**

2. **Notification of damage or warranty claims must be submitted to Market Farm Equipment (M.F.E.) within seven (7) days of the date of failure.**

3. **All defective parts must be made available by the dealer, for inspection by M.F.E. if required, and returned at the dealer's expense.**

4. **All warranty claims must be approved by M.F.E.**

5. **The labour and freight required to replace defective parts is not reimbursable.**

6. **Exchange, credit or warranty status will be based on the results of the inspection of damaged items by the manufacturer.**

7. **Credit will be issued if and when the warranty claim is approved and MUST NOT be deducted from the account by the dealer.**

8. **Products and/or parts not manufactured by M.F.E. are subject to their own manufacturer's warranty conditions.**

WARRANTY CONSIDERATION IS ONLY VALID WHEN THE WARRANTY REGISTRATION FORM HAS BEEN RECEIVED BY MARKET FARM EQUIPMENT.

WARRANTY REGISTRATION

MARKET FARM EQUIPMENT LIMITED
71796A BLUEWATER HIGHWAY, ONTARIO, CANADA, N0M 1N0
Fax: 519-238-6044 E-mail: mfeltd@execulink.com

Purchaser's warranty protection on this equipment is valid only when this registration form is completed by the purchaser and returned to Market Farm Equipment Limited.

Date of purchase: _____

Type of equipment: _____

Model number: _____ Serial number: _____

PURCHASER'S SIGNATURE INDICATES:

- Acceptance of equipment, fully assembled ( ) unassembled ( )
- Receipt of operator's manual
- Clear understanding of warranty
- Receipt of instructions on special safety equipment available
- Receipt of instructions on safe and proper operating procedures

PURCHASER:

Name: _____

Signature: _____

Mailing Address: _____

Prov./State: _____ Postal/Zip Code: _____

Telephone number: _____

Purchased from: _____

THIS WARRANTY MUST BE VALIDATED BY THE MANUFACTURER

It is valid only when a copy of the registration has been received by the manufacturer at address shown.

MARKET FARM EQUIPMENT LIMITED

EXPRESS WARRANTY

Market Farm Equipment Limited warrants against defects in construction and materials for a period of ONE year. We reserve the right to inspect and decide whether material or construction was faulty, or whether abuse or accident voids our guarantee.

This warranty does not cover a component which fails, malfunctions or is damaged as a result of (I) improper modification or repair, (II) accident, abuse or improper use, including loading beyond the specified maximum weights and requirements (III) improper or insufficient maintenance, or (IV) normal wear and tear.

THIS WARRANTY IS EXPRESSLY IN LIEU OF ALL OTHER WARRANTIES OR CONDITIONS, EXPRESS, IMPLIED OR STATUTORY, INCLUDING ANY IMPLIED WARRANTY OF MERCHANTABILITY OR FITNESS FOR A PARTICULAR PURPOSE.

In no way shall Market Farm Equipment Limited be liable for special, direct, incidental or consequential damages of any kind, including but not limited to labour charges.

The exclusive remedy under this warranty shall be repair or replacement of the defective component at Market Farm Equipment Limited's option. This is the entire agreement between Market Farm Equipment Limited and the owner about warranty. NO M.F.E. Ltd. employee or dealer is authorized to make additional warranty on behalf of Market Farm Equipment Limited.

(Fill in the following for future reference)

Serial number:_____

Date of purchase:_____

Purchased from:_____

SAFETY INFORMATION

- Before using auger READ and UNDERSTAND SAFETY INSTRUCTIONS.
- After hydraulic lines are connected, run auger empty to ensure the flighting is rotating in the proper direction. (if ran backwards, damage may occur)
- Auger should be empty when moving or transporting.
- Hydraulic oil leaking under pressure can cause injury. Make sure all hydraulic connections are tight. Before disconnecting hydraulic lines, relieve pressure.
- Do not adjust, clean or service auger while it is running.
- Keep all safety shields in place. Replace any safety decals that become lost or damaged.
- Do not operate the auger in a manner that it was not intended for.
- When transporting, always keep auger in its lowest position.

HYDRAULIC SYSTEM OPERATING RESTRICTIONS

MAXIMUM FLOW – 15 G.P.M. MAXIMUM PRESSURE – 1750 P.S.I.

MAXIMUM FLOW AND MAXIMUM PRESSURE conditions MUST NOT occur simultaneously. Damage will occur and, warranty will be void. Use only ½" hydraulic hose when plumbing. A smaller hose will create heat that will burn out the hydraulic motor, and, warranty will be void.

Do not tee into hydraulic lift cylinders on planters or drills.

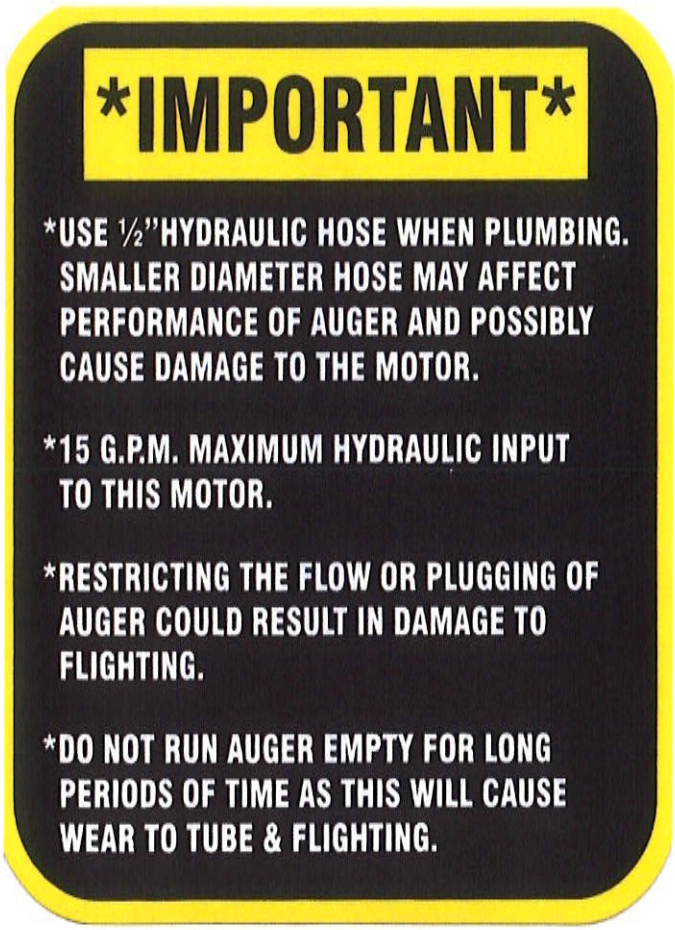

6" TRANSFER AUGER PARTS LIST

REF #	PRO CD	DESCRPTION
1	395	6 CUBIC INCH MOTOR
2	581	VALVE HANDLE WITH BLACK KNOB
3	117	MANIFOLD MOUNT VALVE
4	198	6" MOTOR MOUNT PLATE
5	613	6" DISCHARGE SPOUT
6	193 X __	6" PVC TUBE (PER FOOT, SPECIFY LENGTH)
7	552	6" ½ PLAIN CLAMP BAND (2 HOLE)
8	1378	UNDER-CARRIAGE C/W TIRES
9	848	15-600 X 6 TIRE & RIM
10	1203	HOPPER STOP
11		FLIGHTING (SPECIFY LENGTH AND STYLE) AVAILABLE: PLASTIC, CUPPED PLASTIC & CUPPED STEEL
12	546	6" VERTICAL AUGER HOPPER ASSEMBLY W/ #14/13/15
13	549	6" CLAMP BAND FOR V/A HOPPER
14	548	SAFETY GRILLE FOR V/A
15	178	6" VERTICAL AUGER HOPPER SHELL (ONLY)
16	1202B	6" HEIGHT ADJUSTER ASSY
	387	*ELECTRIC MOTOR MOUNT* INCLUDES: 10" PULLEY, 2" PULLEY, V-BELT, ADJ. MOTOR MOUNT PLATE, SHAFT, & BEARING **(LESS MOTOR)**

8" TRANSFER AUGER PARTS LIST

1	395	6 CUBIC INCH MOTOR
2	581	VALVE HANDLE WITH BLACK KNOB
3	117	MANIFOLD MOUNT VALVE
4	1014	8" MOTOR MOUNT PLATE
5	928	8" DISCHARGE SPOUT
6	528 X___	8" PVC TUBE (SPECIFY LENGTH)
7	522	8" ½ PLAIN CLAMP BAND
8	1378	UNDER-CARRIAGE C/W TIRES
9	848	15-600 X 6 TIRE & RIM
10	1203	HOPPER STOP
11		FLIGHTING (SPECIFY LENGTH AND STYLE) AVAILABLE: PLASTIC, CUPPED PLASTIC & CUPPED STEEL
12	958	8" VERTICAL AUGER HOPPER ASSEMBLY W/ #14/13/15
13	1167	8" CLAMP BAND FOR V/A HOPPER
14	548	SAFETY GRILLE FOR V/A
15	918	8" VERTICAL AUGER HOPPER SHELL (ONLY)
16	1202	8" HEIGHT ADJUSTER ASSY
	387B	*ELECTRIC MOTOR MOUNT* INCLUDES: 10" PULLEY, 2" PULLEY, V-BELT, ADJ. MOTOR MOUNT PLATE, SHAFT, & BEARING **(LESS MOTOR)**

ALL NUTS AND BOLTS SOLD SEPARETLY

TRANSFER AUGER

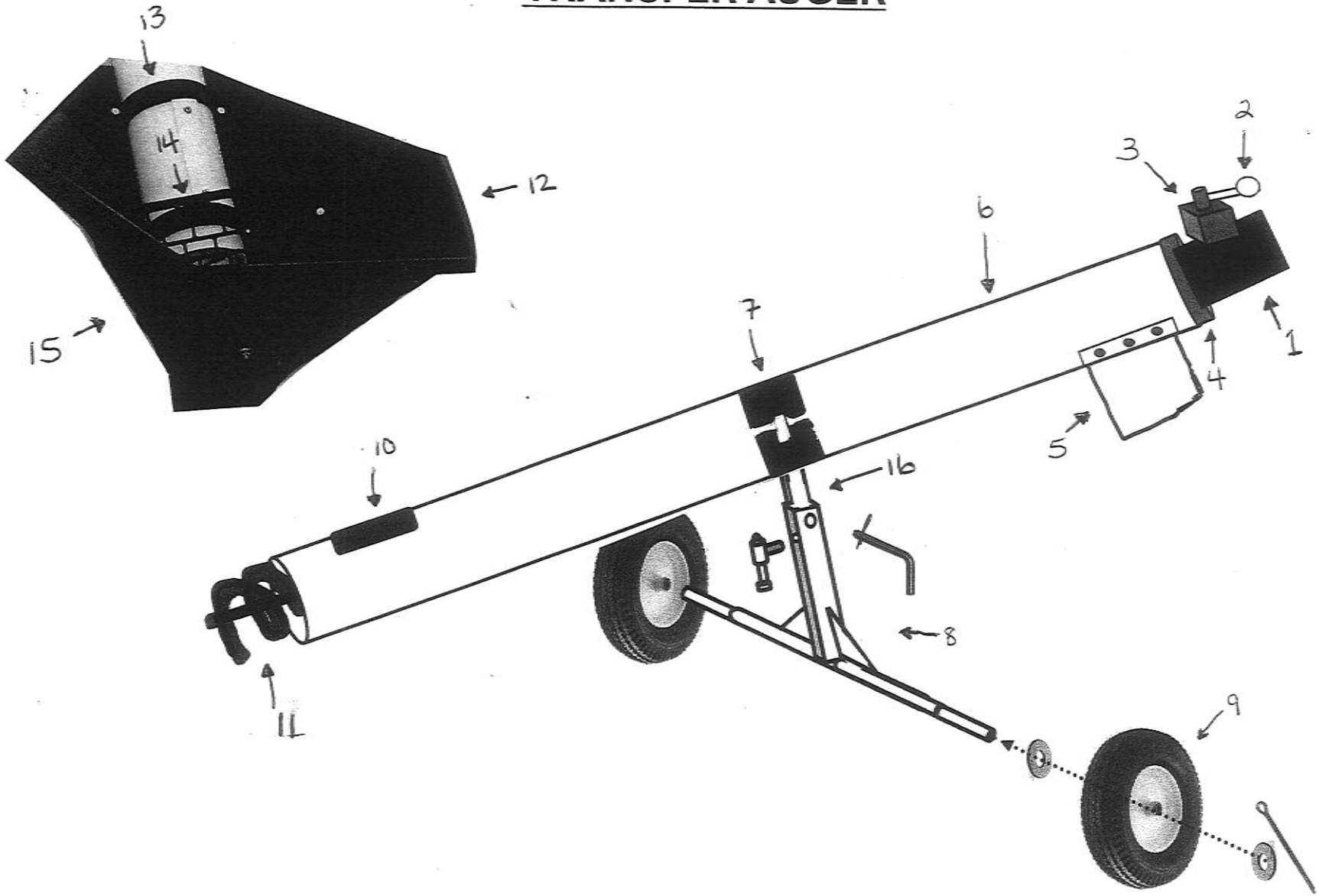

ELECTRIC DRIVE KIT

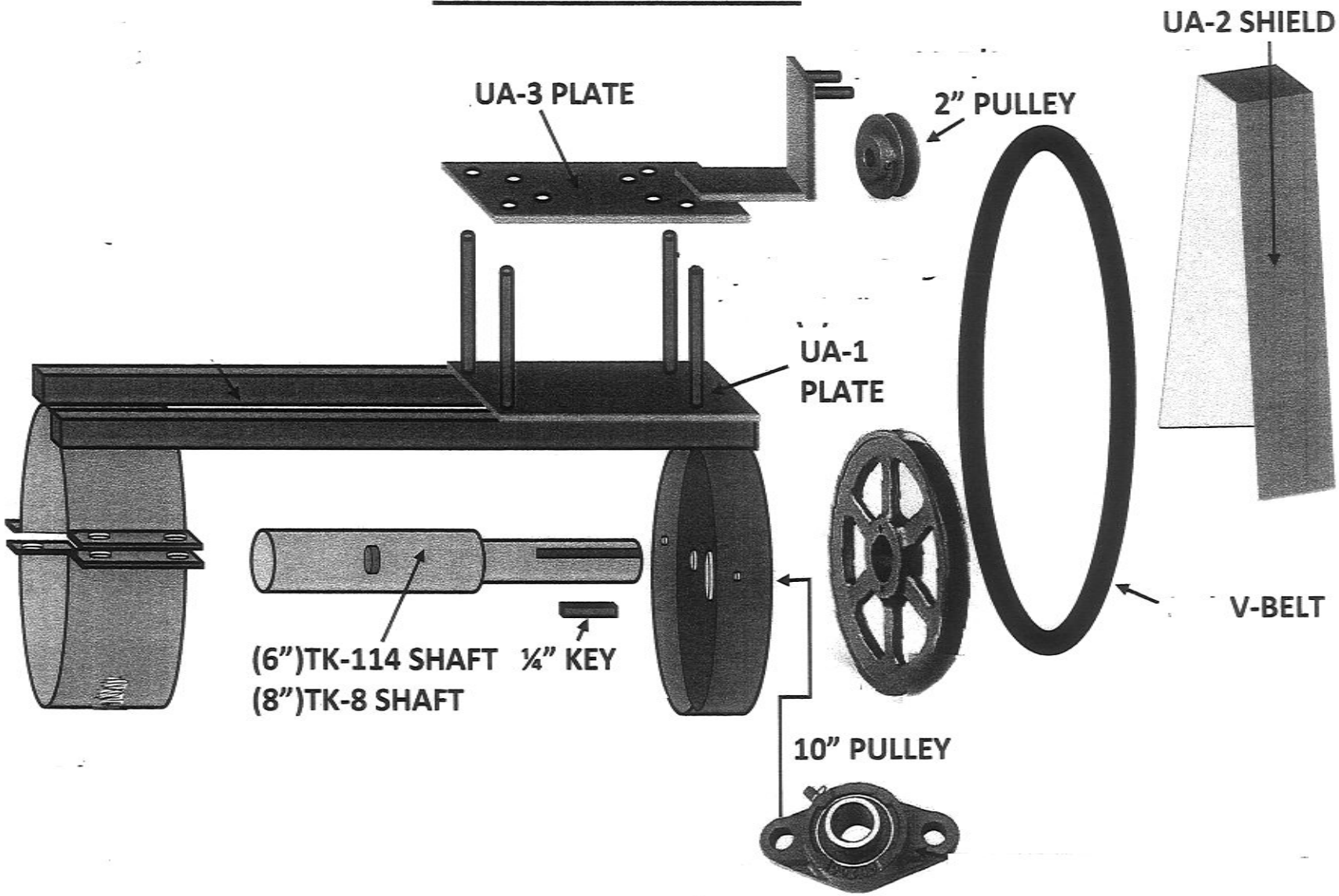

OPTIONAL VALVES FOR HYDRAULIC AUGERS

Note: These optional valves do not replace the shut-off valve on the auger.

A directional valve fitting can be installed to restrict the auger from running in the reverse direction. This valve should be installed on the return line, between the valve on motor and the tractor. Thread is ½" NPT. **RECOMMENDED FOR AUGERS THAT SHOULD NOT BE RUN IN REVERSE, AS IT MAY CAUSE DAMAGE TO THE FLIGHTING.**

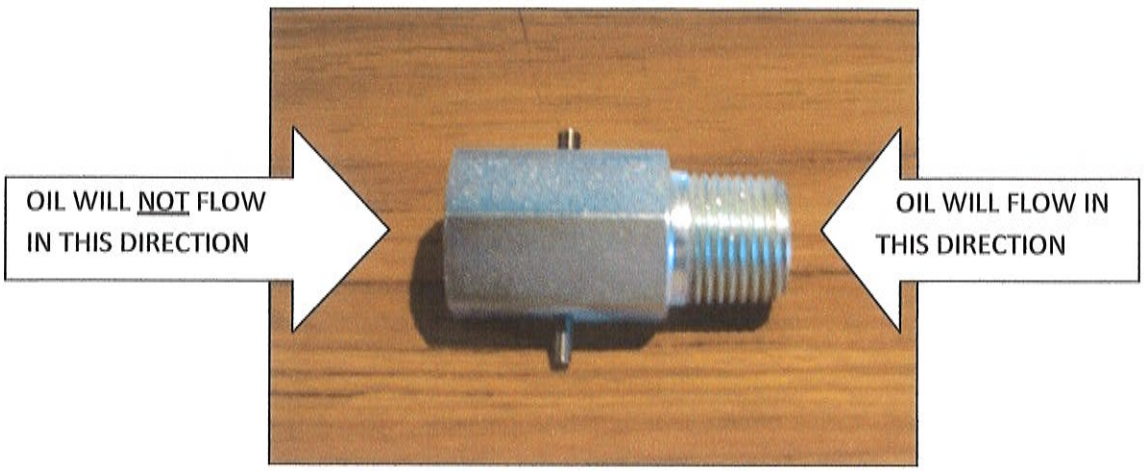

An in-line, pressure compensated, nonadjustable flow regulator valve is available for CLOSED CENTER HYDRAULIC SYSTEMS. In the controlled direction, this regulator will maintain a constant flow rate of 10 GPM. This valve should be installed on the pressure line, between the tractor and the valve on motor. Thread is ¾" NPTF (must be reduced to ½")

RECOMMENDED FOR AUGERS OPERATED BY LARGER TRACTORS WITH LARGER HYDRAULIC OUTPUT.

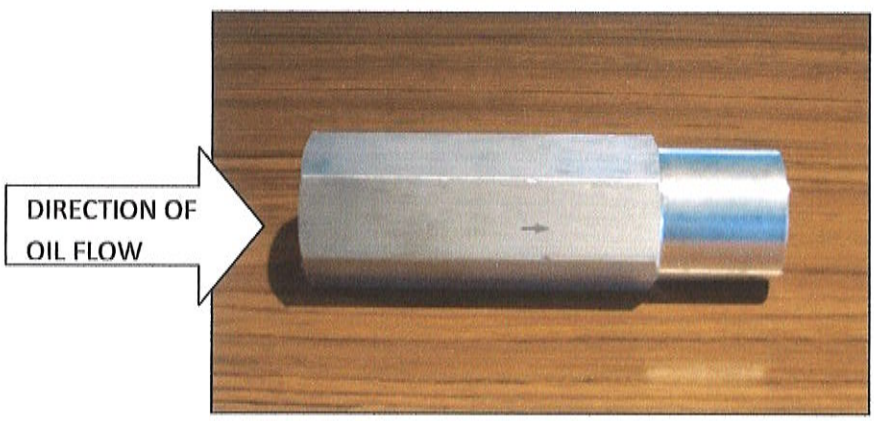

Augers operate best at 10-12 GPM & 1200-1500 PSI.

Market Farm Equipment Ltd. RR# 1 Dashwood, Ontario, Canada N0M 1N0
E-Mail mfeltd@execulink.com Web-Site www.marketfarmequipment.com